CUMMINGS & BRICKER
www.cummingsandbricker.com
support@cummingsandbricker.com

Effective: 11/03/2025

F.O.B. C&B

MERIDIAN

CB In Stock Swing Augers

ITEMNUMBER	DESCRIPTION	PRICE
MRDN1065CB	65' Swing Auger 0 Standard Feed with Hydraulic Winch, 540 PTO	$25,445.00
MRDN1075CB	75' Swing Auger - Standard Feed System with Hydraulic Winch, 540 PTO	$27,307.00
MRDN1085CB	85' Swing Auger - Standard Feed System with Hydraulic Winch, 540 PTO	$29,281.00

10" Swing Augers

ITEMNUMBER	DESCRIPTION	PRICE
14100650000	65' Swing Auger - Standard Feed System **Add PTO, Winch, Setup, & Delivery**	$17,539.00
14100750000	75' Swing Auger - Standard Feed System **Add PTO, Winch, Setup, & Delivery**	$18,828.00
14100850000	85' Swing Auger - Standard Feed System **Add PTO, Winch, Setup, & Delivery**	$20,802.00

10” Swing Auger

Featuring Continuous Super-Edge Flighting, HD undercarriages, robust gearboxes, patented Blow-Out doors.

The swing assembly can be placed on either side of the main auger tube. Simply push the arm from one side of the main auger tube to the other side to seamlessly operate the swing auger to best match your operation.

FEATURES

- Up to 5,450 BPH
- Heavy-duty cable truss system with side cables
- Hydraulic worm gear winch located at hopper lift arm
- Heavy-duty gearboxes
- Head-end features a heavy dual thrust bearing
- Patented product overflow doors located at the discharge end prevent auger plugging
- Powder coat finish
- 10” Outside Diameter x 13 Gauge Auger Tube
- Auger Flight with 9” Outside Diameter x 3/16” c/w Continuous Super Edge
- 2” x 2” x 3/16” Angle Flange Tube Connectors
- A-Frame Undercarriage 6” x 2” x 3/16”, Main Frame 3” x 3”
- Hardened Tooth Sprockets & #60 Chain
- 540 or 1000 RPM Tractor PTO
- 15” 205/75R15
- 62” x 36” x 9 3/8” Hopper Dimensions

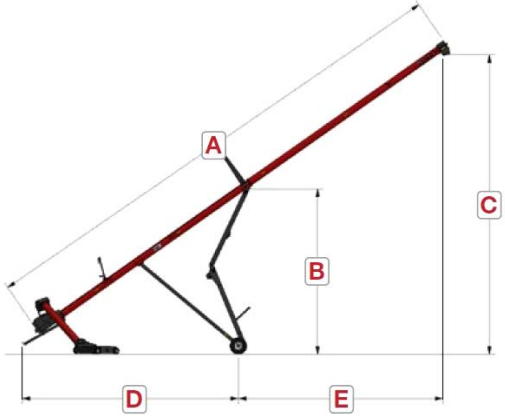

		1065	1075	1085
A	Tube Length	65’	75’	85’
B	Raised		24’ 9”	
	Lowered		6’ 9”	
C	Raised	39’ 3”	45’	50’ 9”
	Lowered	9’ 4”	10’ 7”	11’ 10”
D	Raised		30’ 2”	
	Lowered		38’ 4”	
E	Raised	23’ 5”	31’ 7”	39’ 7”
	Lowered	27’ 2”	37’ 1”	47’
Power Required		100HP	110HP	120HP
Transport Height		12’ 6”	12’ 6”	13’ 5”
Transport Length		66’ 7”	76’ 6”	86’ 5”
Transport Width			9’ 9”	
Axle Extension Wide			12’ 9”	

Measurements reflect a hitch height of approximately 18” above ground level

100 LEHIGH AVE.
BATAVIA, NY 14021
PHONE: 800-252-1552 FAX: 888-852-7406

90 STOVER DRIVE PO BOX 160
CARLISLE, PA 17013
PHONE: 800-222-8969 FAX: 717-249-9384

CUMMINGS & BRICKER
www.cummingsandbricker.com
support@cummingsandbricker.com

Effective: 11/03/2025

F.O.B. C&B

MERIDIAN

10" Swing Augers

PTO Drive Options

ITEMNUMBER	DESCRIPTION	PRICE
13000009482	540 PTO drive w/ Series 55 Heavy Duty PTO Shaft - REQUIRED	$2,122.00
13000009747	540 Reverser Option w/Tensioner	$886.00
13000009748	540 Idler	$396.00

Winch Options

ITEMNUMBER	DESCRIPTION	PRICE
13000009188	Hand Winch	$486.00
13000009446	Hydraulic Winch	$1,380.00

Accessories

ITEMNUMBER	DESCRIPTION	PRICE
13000005040	Kramble 10" - 12V Swing Mover, includes 1 remote	$3,247.00
13000005706	LED Work Light kit - Augers - 65' / 66'	$592.00
13000005707	LED Work Light Kit - Augers 72' / 75'	$592.00
13000005709	LED Work Light Kit - Augers 85'	$592.00
13000009688	10" Poly Flex Spout (Standard)	$252.00
130000010008	10" No-Snag Poly Flex Spout	$160.00
130000010599	Cable Weight Kit	$235.00
13000009855	Transport Safety Chains	$144.00
13000006449	Additional Remote - Key FOB Kramble Mover	$272.00
130000012065	Hopper Extender Wear Kit - For 10" Augers (In Lieu of Standard Hopper Flight)	$1,082.00
13000009680	Transport Safety Kit C/w Side Market Lights & signals	$1,953.00

Set-Up And Additional Install Fees

ITEMNUMBER	DESCRIPTION	PRICE
14900114610	Set-Up Charge For Custom (Non-Stock) 65' Swing Auger	$1,390.00
14900114750	Set-Up Charge For Custom (Non-Stock) 75' Swing Auger	$1,800.00
14900114754	Set-Up Charge For Custom (Non-Stock) 85' Swing Auger	$1,840.00
13000042705	Installation For LED Work Light Kit	$115.00
13000042755	Installation For Swing Auger Hopper Mover	$200.00
14900114568	Installation For 10" & 13" Swing Auger PTO Drive Kit	$315.00
14900114572	Installation For 10" & 13" Swing Auger Reverser Kit	$55.00
14900114576	Installation For 10" & 13" Swing Auger Winch	$55.00
14900114580	Installation For 10" & 13" Swing Auger Transport Safety Kit	$105.00
14900114658	Installation For 10" & 13" Swing Auger Cable Weight Kit	$10.00
14900114706	Installation For 10" Swing Auger Transport Safety Chains	$40.00

100 LEHIGH AVE.
BATAVIA, NY 14021
PHONE: 800-252-1552 FAX: 888-852-7406

90 STOVER DRIVE PO BOX 160
CARLISLE, PA 17013
PHONE: 800-222-8969 FAX: 717-249-9384

CUMMINGS & BRICKER
www.cummingsandbricker.com
support@cummingsandbricker.com

Effective: 11/03/2025

F.O.B. C&B

MERIDIAN

CB In Stock Conveyors

ITEMNUMBER	DESCRIPTION	PRICE
1615CB	16" x 16' Transfer Conveyor - Rail Car Hopper, Electric Drive, 1 HP Motor, Assembled	$12,957.00
1616RCCB	16" x 16' Transfer Conveyor - Rail Car Hopper, Gas Drive, 13HP Honda Engine, Assembled	$14,502.00
1635FLTCB	16" x 35' Conveyor - Field Loader Hopper with Top Drive, 10 HP Electric Motor, Assembled	$19,725.00
1640TLCB	16" x 40' Truck Loader Conveyor - Field Loader Hopper, Self Propelled Gas Drive, 35 HP Kohler Engine, Lights, Assembled	$46,886.00
1640TLCBLP	16" x 40' Truck Loader Conveyor - Field Loader Hopper, Self Propelled, Gas Drive, Low Pro, 35 HP Kohler, Lights, Assemble	$47,174.00
1640TLCBSS	16" x 40' Truck Loader Conveyor - Field Hopper, Self Propelled Gas Drive, Stainless Steel Ends, 35 HP Kohler Engine, Lights, Assembled	$47,741.00
1640TLSSCB	16" x 40' Stainless Steel Truck Loader Conveyor - Field Loader Hopper, Self Propelled Gas Drive, 38HP Kohler Engine, Lights, Assembled	$57,381.00

16" Truck Loader Conveyors

ITEMNUMBER	DESCRIPTION	PRICE
650507760	16" x 40' Truck Loader Conveyor - Field Loader Hopper, Self Propelled, Gas Drive, ADD MOTOR	$33,269.00
650507760S	16" x 40' Truck Loader Conveyor w/Stainless Steel Components - Field Loader Hopper, Self Propelled Gas Drive, ADD MOTOR & SETUP	$42,670.00

Motor Options

ITEMNUMBER	DESCRIPTION	PRICE
650508087	35HP Kohler Motor Includes Muffler	$5,277.00

Accessories

ITEMNUMBER	DESCRIPTION	PRICE
650507319	Light Kit - For 1640/1650 Models	$803.00
650507320	Electric Actuator for Discharge Hood	$247.00
650508887	Stainless Steel Ends (In Lieu Of Mild Steel)	$2,830.00

SET-UP FEE: ADD $3,000 for 16” Truck Loader Conveyors

100 LEHIGH AVE.
BATAVIA, NY 14021
PHONE: 800-252-1552 FAX: 888-852-7406

90 STOVER DRIVE PO BOX 160
CARLISLE, PA 17013
PHONE: 800-222-8969 FAX: 717-249-9384

CUMMINGS & BRICKER
www.cummingsandbricker.com
support@cummingsandbricker.com

Effective: 11/03/2025

F.O.B. C&B

MERIDIAN

16" Field Loader Conveyors

ITEMNUMBER	DESCRIPTION	PRICE
650507755	16" x 35' Field Loader Conveyor - Field Loader Hopper, Top Drive, ADD ELECTRIC MOTOR & SETUP	$16,047.00

Motor Options

ITEMNUMBER	DESCRIPTION	PRICE
1910000030	10HP 1 Phase Motor 1800 RPM	$2,091.00

SET-UP FEE: ADD $1,000 for 16” Field Loader Conveyors

16” Truck Loader Conveyors

Truck Loader models are self-propelled, self-contained and fully hydraulic meaning no hassle with belts, pulleys, chains or sprockets.

STANDARD FEATURES

- Up To 9,000BPH
- Collapsible hopper
- Full length windguards
- Heavy duty undercarriages
- Hydraulic lift
- Spring tension drive box
- A-Frame Under Carriage

TRUCK LOADER (TL) FEATURES

- Self-contained drive system
- Heavy duty mover kit
- Steering wheels with hydraulic hopper lift
- Hydraulic valves & controls on tow vehicle’s drive side
- Steel fuel tank, hydraulic oil reservoir
- Highway tires
- Discharge hood with electric actuator

FIELD LOADER (FL) FEATURES

- Stainless steel components
- Cold weather pkg (35hp gas engine)
- Heavy-duty, Railcar Hopper

	Axle Width	Transport Height / Length	20° Discharge Height	20° Length	25° Discharge Height	25° Length	30° Discharge Height	30° Length
1640TL	8’ 4”	9’ 7” / 43’ 9”	10’ 7”	40’ 9”	14’	39’ 10”	17’ 4”	38’ 4”
1635FLT	7’ 11”	10’ 5” / 43’ 7”	10’ 5”	30’ 7”	13’ 3”	29’ 10”	15’ 11”	28’ 10”

100 LEHIGH AVE.
BATAVIA, NY 14021
PHONE: 800-252-1552 FAX: 888-852-7406

90 STOVER DRIVE PO BOX 160
CARLISLE, PA 17013
PHONE: 800-222-8969 FAX: 717-249-9384

CUMMINGS & BRICKER
www.cummingsandbricker.com
support@cummingsandbricker.com

Effective: 11/03/2025

F.O.B. C&B

MERIDIAN

16" Transfer Conveyors

ITEMNUMBER	DESCRIPTION	PRICE
650507781	16" x 15' Transfer Conveyor - Field Loader Hopper	$7,570.00
650507783	16" x 16' Transfer Conveyor - Rail Car Hopper	$9,340.00

16” Transfer Conveyors

- Well balanced for easy maneuverability and positioning
- Long hopper for better reach and superior containment

16” Railcar Conveyors

- Well balanced, easy to maneuver and position
- Extra low profile to easily fit under railcars
- Tow package (highway tires and hitch)
- Fold-up containment flaps to keep product on belt
- Optional transition with hold-down wheels
- Optional stainless steel

MODEL	Discharge Height to Ground	Hopper to Ground	Overall Length	Hopper Length
1615	36” - 48”	61/2” – 73/4”	17’ 4”	5’ 10”
1616-RC	36” - 48”	45/8”	20’	5’ 10”

Motor Options

ITEMNUMBER	DESCRIPTION	PRICE
1920000010	13HP Honda Electric Start	$1,895.00
1910000023	7.5HP 1PH Motor	$1,772.00

Drive Options

ITEMNUMBER	DESCRIPTION	PRICE
501258	Gas Drive - Pulleys, belts and guards, ADD MOTOR	$1,401.00
501253	Electric Drive - Pulleys, Belts, & Guards, ADD MOTOR	$1,803.00

100 LEHIGH AVE.
BATAVIA, NY 14021
PHONE: 800-252-1552 FAX: 888-852-7406

90 STOVER DRIVE PO BOX 160
CARLISLE, PA 17013
PHONE: 800-222-8969 FAX: 717-249-9384

2902 Expansion Blvd.
Storm Lake, IA 50588
Toll Free 800-437-2334
Fax 712-732-1028

Fuel Trailer Pricing

Effective August 19, 2024

520 Fuel Trailer

Item#	Model #	Capacity	Dimensions	Color	Baffles	Retail Price
68607	520 Fuel Trailer	520 Gallons	12'4"L x 7'9"W x 4'10"H Weight 1,600Lbs	Bone White	**1**	$ 8,590

***EMPTY TRAILER*

Features:

Trailer: *Welded Frame -Powder coat*
Tandem Axle with Electric Drum Brakes
Steel Wheels w/ 14" Tires 10-ply minimum
Adjustable bumper hitch 2-5/16"
Wire harness connector: Standard 7-pin Round
Shatter Resistant Poly Fenders
Level Gauge
Locking Fill Cap
Front Deck
No Pump Pkg Included

Special Editions

Item#	Packages	Description		Retail Price
40028	**Basic Fuel Trailer -**	*15 GPM 12 V Pump, 12' Hose, Manual Nozzle, Fuel Filter,*		$ 1,250
		Battery Box (Battery not Included)	*68607 + 40028*	*$ 9,840*
60621	**Ultra Package -**	*Rear Compartment Cover, 40 gpm Pump, Ultra high flow auto nozzle,*		$ 8,750
		55 Gal DEF Sys, Alum Wheels	*68607 + 60621*	*$ 17,340*
		25FT Dual Hose Reel Diesel / DEF		

Rear Compartment Options (Factory Installed)

Item#	Description		Retail Price
60622	40 GPM Pump Pkg, 25' Hose Reel, Rear Compartment Cover		$ 4,425
		68607 + 60622	*$ 13,015*
60623	12v 25 GPM Pump Package, 25' Hose Reel		$ 3,525
		68607 + 60623	*$ 12,115*
60627	Rear Compartment Cover - with Solar charger & gas shocks		$ 1,155
60638	Solar Charger Kit		$ 210

DEF Options (Factory Installed)

60626	DEF System 55 Gallon, 1 Tank Assembly	*Includes 3/4" x 20' hose & nozzle reel not included*	$ 2,395

Trailer Options (Factory Installed)

30725	Deluxe Aluminum Wheels Upgrade	*In lieu of white steel wheels*	$ 325
30726	Spare Tire	*Steel Rim*	$ 350
30727	Deluxe Spare Tire	*Aluminum Rim Each*	$ 470
30728	Tongue Mounted Tool Box	*Poly Tool Box*	$ 295

2902 Expansion Blvd.
Storm Lake, IA 50588
Toll Free 800-437-2334
Fax 712-732-1028

Fuel Trailer Pricing

Effective August 19, 2024

990 Fuel Trailer

Item#	Model #	Capacity	Dimensions	Color	Baffles	Retail Price
68601	990 Fuel Trailer	990 Gallons	15' 10" x 95" x 62" Weight - 3900#	Bone White	3	$ 19,090

***EMPTY TRAILER*

Features:

Trailer: *Welded Frame -Powder Coat Black*
Tandem Axle with Electric Drum Brakes
Steel Wheels w/ 16" Tires 10-ply minimum
Level Gauge
Adjustable bumper hitch 2-5/16"
Wire harness connector: Standard 7-pin Round
Diamond Plate Rock Guard
Interior LED lighting
Locking Fill Cap
No Pump Pkg Included

Special Editions

Item#	Packages	Description		Retail Price
40655	**Basic Pkg**	25 GPM 12v Pump, 35' Hose Reel, Auto Nozzle, Fuel Filter, White Steel Rims		$ 3,600.00
			68601 + 40655	*$ 22,690.00*
68720	**MAX Edition**	40 gpm Pump, 50' Hose, 55 Gallon DEF Sys, Aluminum Rims		$ 8,325
			68601 + 68720	*$ 27,415*
68610	**Service MAX 2**	40 gpm Pump, 50' Hose, 110 Gallon DEF Sys, Alum Whls, Utl box,		$ 24,995
		Conv Kit, Welder/Generator/Air Compressor Combo	*68601 + 68610*	*$ 44,085.00*

Convienence Options (*Factory Installed*)

Item#	Description	Details	Retail Price
68753	Convenience Kit	*Spill Kit, First Aid Kit, Fire Extinguisher, Utility Caddy*	$ 470
68722	Electric Jack	*In lieu of Jack 5K A Frame Mount*	$ 415
60638	Solar Charger Kit		$ 210

Pump & Cowling Options (Factory Installed)

68701	40 GPM Fuel Pump, 35' Hose Reel, Auto Nozzle		$ 3,315
		68601 + 68701	*$ 22,405*
68702	50' Hose Reel Upgrade	*In lieu of 35' Hose Reel*	$ 350

DEF System (Factory Installed)

32096	DEF System 55 Gallon, 1 Tank Assembly	$ 4,050
68710	DEF System 110 Gallon, 2 Tank Assembly	$ 5,035
68709	55 Gallon DEF Tank Add on Unit (for DEF system upgrade)	$ 1,230

Utility Box Options (Factory Installed)

32106BW	Add-On Rear Utilty box	$ 3,800
68728	Welder Generator Air Compressor Combo	$ 7,570
68729	2 in 1 Air compressor generator combo	$ 3,915
68730	25' Combination Air & Electical Cord Reel	$ 1,145

Trailer Options (Factory Installed)

68705	Deluxe Aluminum Wheels Upgrade -Tandem	*In lieu of Steel Wheels*	$ 735
68706	Tire Spare Assy	*Rear mount w/ Steel Rim*	$ 350
68707	Tire Spare Assy Aluminum	*Rear mount w/ Aluminum Rim*	$ 475
34518	Spare Tire Kit, Steel, 990 Back Mount*	*Must be used when Utility Box is added.*	$ 475
34519	Spare Tire Kit, Aluminum,990 Back Mount*	*Must be used when Utility Box is added.*	$ 595

2902 Expansion Blvd.
Storm Lake, IA 50588
Toll Free 800-437-2334
Fax 712-732-1028

Seed Express™ Pricing

Effective Nov 18, 2025

Bulk Seed Tender - Auger Models

Item#	Model #	Trailer	Discharge Height	Discharge Rates	Capacity	Retail Price
80197	112 BST-T	*Bumper Hitch Trailer Included*	11ft. 11in.	400 #/min.	110 Cu. Ft	$ 17,170
80601	225RST-BH	*Bumper Hitch Trailer Included*	15ft. 6in	400 #/min.	225 Cu. Ft	$ 25,370
80603	225RST-BWT-BH*	*Bumper Hitch Trailer Included*	15ft. 10in	400 #/min.	225 Cu. Ft	$ 28,825
		* Includes Scale kit				

Standard Features:

- *Bone White Powder Coat Paint Finish*
- *GX160 Honda Engine w/ Electric Start and Gear Reduction Clutch*
- *3-Tier Telescopic Spout w/ Throttle Switch*
- *6" Poly-Cupped Auger*
- *Steel Roll Back Lid (110BST)*
- *Actuator w/ Variable Engine Throttle Control*
- *Fold Over Auger w/ Lift Assist*
- *Roll top tarp (225RST)*
- *1/4" Coupler for Treatment Injection*
- *Cleanout Door*
- *Bulk Fill Auger (225 RST)*
- *Gate Control(s)*
- *View Glasses*
- *Actuator Lift Assist (225 RST)*

Trailer Features: • Electric Brakes • Torsion Axle(s) • 2 5/16 Ball Hitch Coupler • Battery Break-away • Black Powder Coat Paint Finish • L.E.D. lights • Wire harness w/ 7-pin Connector

Trailers

Item#	Model #				
68705	Aluminum Wheels (Upgrade Only)	*225 only*		$	735
16889	Gooseneck Hitch Upgrade	*225 only*		$	3,530
43013	Upgrade to 14 ply tires	*225 only*	***N/A w Alum Rim Upgrade***	$	500

Options

Item#	Model #		Retail Price	
34139	Wireless Key FOB	Factory Install - removes wired system	$	415
34733	Actuator Fold-Over Lift Assy for 112BST	Factory Install - removes gas shocks	$	1,285

2902 Expansion Blvd.
Storm Lake, IA 50588
Toll Free 800-437-2334
Fax 712-732-1028

Titan™ Pricing

Effective Nov 18, 2025

Auger Models

Item#	Model #	Trailer/ Axle Combo	Discharge/ Overall Height	Discharge Rates	Capacity	Retail Price
80208	Titan-2XT	Bumper Hitch/Tandem	13ft 11in / 14ft 10in	*500 #/min.*	2 Seed Boxes	$ 16,220

Standard Features:

- *High Impact Bone White Powder Coat Finish*
- *6" Poly Cupped Auger*
- *Box Guides (US Patent # 6,964,551)*
- *Secure Box Lockdowns*
- *Low Profile Deck*
- *Titan Cover Lid Storage*
- *Honda GX Series Engine w/ Electric Start & Battery Recharge*
- *Cleanout door*
- *3-Tier Telescopic Spout w/ Control Switch*
- *Wired 2-Feature Hydraulic Power system*
  1. *Hydraulic Raise / Lower*
  2. *Hydraulic Conveyor Start/Stop with Variable speed Setting*

Trailer Features:

- *High Impact Black Powder Coat Finish*
- *Tandem 3500# Torsion Axles w/ Electric Brakes*
- *2 5/16 Ball Hitch Coupler*
- *Battery Break-away*
- *Wire harness w/ 7-pin Connector*
- *L.E.D. lights*

Conveyor Models

Item#	Model #	Trailer/ Axle Combo	Discharge Height	Discharge Rates	Capacity	Retail Price
80201	Titan 2SE-T	Bumper Hitch/Tandem	10ft 1in	*1000 #/min.*	2 Seed Boxes	$ 24,085
80616	Titan 2SE-BWT*	Bumper Hitch/Tandem	10ft 1in	*1000 #/min.*	2 Seed Boxes	$ 27,880
80401	Titan 4SE	N/A	9ft 4in	*1000 #/min.*	4 Seed Boxes	$ 23,060
80402	Titan 4SE-T	Bumper Hitch/Tandem	11ft 11in	*1000 #/min.*	4 Seed Boxes	$ 32,130
80403	Titan 4SE-BWT*	Bumper Hitch/Tandem	12ft 4in	*1000 #/min.*	4 Seed Boxes	$ 36,850

* Includes Scale kit

Standard Features:

- *High Impact Bone White Powder Coat Finish*
- *6" x 17' Belt Conveyor w 8" Cleated Belt (19' on 4SE)*
- *Box Guides (US Patent # 6,964,551)*
- *Secure Box Lockdowns*
- *Low Profile Deck*
- *Honda GX Series Engine w/ Electric Start & Gear Reduction Clutch*
- *Cleanout door*
- *Lower Throttle Control*
- *180° Swing w multiple lock points*
- ***Down Spout NOT INCLUDED***

Trailer Features:

- *High Impact Black Powder Coat Finish*
- *Tandem 3500# Torsion Axles w/ Electric Brakes (Tandem 7k on 4SE)*
- *2 5/16 Ball Hitch Coupler*
- *Battery Break-away*
- *Wire harness w/ 7-pin Connector*
- *L.E.D. lights*

Conveyor Model Spout/Throttle Options

Item#	Description		Retail Price
38537-00	7" Quick Tach Assembly - *Three piece unit*	*Allows easy switching between spouts (SE Models Only)*	$ 200
38539-00	Upper Throttle Control Kit	*Includes Toggle Switch and Upper Mount*	$ 125
34754	7" x 18" Flex Spout Kit	*Includes 7" T Bolt Clamp*	$ 70
38536-00	7" x 48" Short Spout Assembly	*Includes 7" T Bolt Clamp, Toggle Switch, Throttle Handle, 4' Cable Extension*	$ 380
38541-00	7" x 3 Tier Spout Assembly	*Includes 7" T Bolt Clamp, Toggle Switch, Throttle Handle, Coiled Cord*	$ 630

Tender Scale Options

Item#	Description		Retail Price
42182	Scale Kit Titan 2XT	*Factory Installed*	$ 4,650

Trailer Options

Item#	Description			Retail Price
30725	Aluminum Wheels (Upgrade Only)	*2XT & 2SE*		$ 325
68705	Aluminum Wheels (Upgrade Only)	*Titan 4SE only*		$ 735
43013	Upgrade to 14 ply tires	*Titan 4SE only*	***N/A w Alum Rim Upgrade***	$ 500
16889	Gooseneck Hitch Upgrade	*Titan 4SE only*		$ 3,530
37127	Talc Applicator	*Titan 2SE & 4SE only*		$ 1,825

2902 Expansion Blvd.
Storm Lake, IA 50588
Toll Free 800-437-2334
Fax 712-732-1028

Seed Express™ Pricing

Effective Nov 18, 2025

240 (basic unit)

Item#	Model #	Trailer	Min/Max Discharge Height	Discharge Rates	Capacity	Retail Price
80136	240-Forward Facing	*Bumper Hitch - Included*	7ft 1 1/2in / 11ft 4in	1,000 #/min.	240 Cu. Ft.	$ 30,650

Standard Features:

- *Bone White Powder Coat Paint Finish*
- *Premium Spool Tension Roll Tarp System*
- *6" x 19ft. Long Conveyor*
- *3-Tier Telescopic Spout with control switch*
- *GX340 Honda Engine w/ Electric Start & Battery Recharge*
- *2 - 120 cu. ft. Compartments*
- *2 View glasses*
- *Wired 2-Feature Hydraulic Power system*
  1. *Hydraulic Raise / Lower*
  2. *Hydraulic Conveyor Start/Stop with Variable speed Setting*
- *Manual conveyor Swing - 180 degrees*
- *Manual Gate control*
- *Sample gates*

Trailer Features:

- Electric Brakes
- 2 5/16 Ball Hitch Coupler
- Wire harness w/ 7-pin Connector
- L.E.D. Lights
- Torsion 7K Axles
- Battery Break-away
- Black Powder Coat Finish

Options

Item#	Description		Retail Price
37128	Talc Applicator	**240 Basic**	$ 1,825
38537	Short Spout Assembly	**Replaces the 3 tier spout (240 basic only)**	$ 50
68705	Aluminum Wheels (Upgrade Only)		$ 735
43013	Upgrade to 14 ply tires	***N/A w Alum Rim Upgrade***	$ 500

NOTE: SCALES ARE NOT AVAILABLE FOR THIS MODEL

2902 Expansion Blvd.
Storm Lake, IA 50588
Toll Free 800-437-2334
Fax 712-732-1028

Seed Express™ Pricing

Effective Nov 18, 2025

240RT Models

Item#	Model #	Trailer	Min/Max Discharge Height	Discharge Rates	Capacity	Retail Price
6" Conveyor w/ 8" Meridian Cleated Belt						
80250	240 RT6-BH	*Bumper Hitch Trailer Incl*	6ft 2in / 11ft 7in	1,000 #/min.	240 Cu.Ft.	$ 37,875
80361	240 RT6-AC-BH	*Bumper Hitch Trailer* ***with Auto-Convey***	6ft 7in / 12ft	1,000 #/min.	240 Cu.Ft.	$ 43,150
8" Conveyor w/ 12" Meridian Cleated Belt						
80252	240 RT8-BH	*Bumper Hitch Trailer Incl*	5ft 11in / 11ft 5in	2,000 #/min.	240 Cu.Ft.	$ 40,650
80363	240 RT8-AC-BH	*Bumper Hitch Trailer* ***with Auto-Convey***	6ft 4in / 11ft 10in	2,000 #/min.	240 Cu.Ft.	$ 45,925

Standard Features: ***All RT models are forward facing*

- *6-Feature Hydraulic Power System*
- *8 Inch x 19 Foot High Capacity Conveyor*
- *GX 340 Honda Engine w/ Electric Start and Battery Recharge*
- *High Impact Bone White Powder Coat Finish*
- *NEW Standard Forward Facing*
- *Wireless Remote with LCD Display*
- *8" Conveyor w/ 12" Patented Meridian Cleated Belt*
- *Wired Master Control Box*
- *Premium Spool Tension Roll Tarp System*
- *Sample gates*

Trailer Features:

- *Torsion 7K Axles on Tandem Axle Trailer*
- *Bolt-on Bumper Hitch*
- *Battery Break-away*
- *High Impact Black Powder Coat Finish*
- *Electric Brakes*
- *2 5/16 Ball Hitch Coupler*
- *Wire harness w/ 7-pin Connector*
- *L.E.D. Lights*

Trailer Options

Item#	Description		Price
16889	Gooseneck Hitch Upgrade		$ 3,530
68705	Aluminum Wheels (Upgrade Only)		$ 735
43013	Upgrade to 14 ply tires	***N/A w Alum Rim Upgrade***	$ 500

Spout Options for 6" Conveyor

38537-00	7" Quick Tach Assembly - *Three piece unit*	*Allows easy switching between long & short spouts*	$ 200
34754	7" x 18" Flex Spout Kit	*18in. of 7" flex w/ 7" T-bolt clamp*	$ 70
38531	7" x 48" Short Stub Spout	*18" of 7" flex riveted to 30" hard plastic*	$ 155
31506	7" x 3 Tier spout Assembly	*Includes 21240-04 / 21433-00*	$ 370

Spout Options for 8" Conveyor

38512	10" Quick Tach Assembly - Three Piece unit	*Allows easy switching between long & short spouts*	$ 225
38548-00	10" Flex Spout Assembly	*4ft. of 10" flex w/ 10" T-bolt clamp*	$ 200
31505	10" 2 Tier Spout Assembly	*Includes 21240-07 / 20084*	$ 625

Talc Applicator

37125	Talc Applicator	**for all RT MODELS**	$ 1,825

2902 Expansion Blvd.
Storm Lake, IA 50588
Toll Free 800-437-2334
Fax 712-732-1028

Seed Express™ Pricing

Effective Nov 18, 2025

375RT Models

Item#	Model #	Trailer	Min/Max Discharge Height	Discharge Rates	Capacity	Retail Price
80387	375RT8	*no trailer*	4ft 4in / 10ft 8in	2,000 #/min.	375 Cu. Ft.	$ 32,235
80388	375RT8-BH	Bumper Hitch Trailer	6ft / 12ft 4in	2,000 #/min.	375 Cu. Ft.	$ 43,365
80389	375RT8-AC-BH	*Bumper Hitch Trailer* ***with Auto-Convey***	6ft / 12ft 9in	2,000 #/min.	375 Cu. Ft.	$ 48,400
80390	375RT8-GN	*Gooseneck Trailer*	6ft 5in / 12ft 4in	2,000 #/min.	375 Cu. Ft.	$ 46,880
80391	375RT8-AC-GN	*Gooseneck Trailer* ***with Auto-Convey***	6ft 5in / 12ft 9in	2,000 #/min.	375 Cu. Ft.	$ 52,365

***All RT models are forward facing*

Standard Features:

- *6-Feature Hydraulic Power System*
- *8 Inch x 22 Foot High Capacity Conveyor*
- *GX 340 Honda Engine w/ Electric Start and Battery Recharge*
- *High Impact Bone White Powder Coat Finish*
- *NEW Standard Forward Facing*
- *Wireless Remote with LCD Display*
- *8" Conveyor w/ 12" Patented Meridian Cleated Belt*
- *Wired Master Control Box*
- *Premium Spool Tension Roll Tarp System*
- *Sample gates*

Trailer Features:

- *Torsion 7K Axles on Triple Axle Trailer*
- *Bolt-on Bumper Hitch or Gooseneck trailer*
- *Battery Break-away*
- *High Impact Black Powder Coat Finish*
- *Electric Brakes*
- *2 5/16 Ball Hitch Coupler*
- *Wire harness w/ 7-pin Connector*
- *L.E.D. Lights*

Trailers

60643	Aluminum Wheels (Upgrade Only)		$	1,100
43014	Upgrade to 14 ply tires	***N/A w Alum Rim Upgrade***	$	750

Spout Options for 8" Conveyor

38512	10" Quick Tach Assembly - Three Piece unit	*Allows easy switching between long & short spouts*	$	225
38548-00	10" Flex Spout Assembly	*4ft. of 10" flex w/ 10" T-bolt clamp*	$	200
31505	10" 2 Tier Spout Assembly	*Includes 21240-07 / 20084*	$	625

Talc Applicator

37125	Talc Applicator	**for all RT MODELS**	$	1,825

2902 Expansion Blvd.
Storm Lake, IA 50588
Toll Free 800-437-2334
Fax 712-732-1028

Seed Express™ Pricing

Effective Nov 18, 2025

4055 Series

Item#	Model #	Trailer	Min/Max Discharge Height	Discharge Rates	Capacity		Retail Price
81990	4055-8"	*No Trailer*	9ft 5in / 13ft 2in	1200 to 2500#/min.	400 Cu. Ft	$	43,470
81992	4055BH-8"	*Triple Axle w/ BH*	10ft 9in / 14ft 7in	1200 to 2500#/min.	400 Cu. Ft	$	48,195
81991	4055GN-8"	*Triple Axle w/ GN*	10ft 9in / 14ft 7in	1200 to 2500#/min.	400 Cu. Ft	$	51,925

Standard Features:

- *6-Feature Load Sensing Hydraulic Power System*
- *8 Inch x 24 Foot High Capacity Conveyor (824CHC)*
- *8" Conveyor w/ 12" Patented Meridian Cleated Belt*
- *Discharge Height up to 15ft*
- *GX340 Honda Engine w/ Electric Start and Battery Recharge*
- *High Impact Bone White Powder Coat Finish*
- *Wireless Remote with LCD Display*
- *Premium Spool Tension Roll Tarp System*
- *Conveyor Inlet Canvas Cover*
- *Steep Angle Hopper Design*
- *Independent Scale Support Structure*
- *Wired Master Control Box*

Trailer Features:

- *Torsion 7K Axles on Triple Axle Trailer -or-*
- *Bolt-on Bumper Hitch or Gooseneck trailer*
- *Battery Break-away*
- *New High Impact Black Powder Coat Finish*
- *Electric Brakes*
- *2 5/16 Ball Hitch Coupler*
- *Wire harness w/ 7-pin Connector*
- *L.E.D. Lights*

Scale / Lighting / Tarp Options

Item#	Description			Retail Price
40364	Work light Kit LED	*Adds working lights to conveyor head, power system, and hopper discharge.*	$	630
18689	Electric Roll Tarp Top	*Factory Install*	$	1,800
40354	Scale System 4055 with Auto Convey™	*Factory Install*	$	4,535

- ***Auto Convey™*** *- A smart scale feature allows the user to set the desired unload weight and gate into the Master Control Box.*

Trailer Options

Item#	Description			Retail Price
60643	Aluminum Wheels (Upgrade Only)		$	1,100
43014	Upgrade to 14 ply tires	***N/A w Alum Rim Upgrade***	$	750
40360	Electric Jack	*Factory Install / BH ONLY*	$	525

Spout Options for 8" Conveyor

Item#	Description			Retail Price
38512	10" Quick Tach Assembly - Three Piece uni	*Allows easy switching between long & short spouts*	$	225
38548-00	10" Flex Spout Assembly	*4ft. of 10" flex w/ 10" T-bolt clamp*	$	200
31505	10" 2 Tier Spout Assembly	*Includes Steel Throttle Handle*	$	625

Talc Applicator

43023	Talc Applicator		$	1,825

MERIDIAN®

Auger Price List

USA Region

Contents

Truck Load Augers Introduction	**2**
8” Fully Equipped Auger Packages	6
10” / 12” / 13” Fully Equipped Auger Packages	7
8” Heavy Duty Belt Drive Augers	8
10” Heavy Duty Belt Drive Augers	9
10” and 12” Truck Loading Belt Drive Augers	10
Augers Movers and Engines	11
Auger Accessories	12
Swing Augers Introduction	15
10” Swing Augers	21
13” Swing Augers	22
13” Swing Augers - EXTENDABLE SWING	24
12” SLMD Swing Augers	26
14” SLMD Swing Augers	27
14” SLMD Swing Augers EXTENDABLE SWING	28
8” 872 Auger	29

Truck Load Auger Price Pages

Introduction

Meridian offers Truck Load Augers in various sizes and configurations. The following pages will help you determine the best fit for your customer based on capacity, length, and available options.

A Truck Load Auger is an auger that's primary use is unloading. Sometimes referred to a portable auger, or conventional auger, these augers in longer lengths can also fill shorter bins, but do not come equipped with swing attachments, and are not ideal for loading typical sized bins on today's farms.

Step One - Size & Model

Meridian Truck Load Augers are available in 8", 10", 12", and as of 2025, 13" diameters. The model number consists of the auger series, tube diameter, and the tube length. Farmers who demand faster unload speeds should consider the larger diameter augers.

Meridian's Truck Load Augers are available in HD (Heavy-Duty) and TL (Truck Load) series. The HD augers have a heavier frame and belt, and the TL models utilize the frame and belt components of the size down HD models. For example, the TL12 is built with the frame/belt of the HD10, the TL10 is built with the frame/belt of the HD8. The only exception to this is the TL13 model, because there is no HD12. The longer lengths (HD53, HD59), feature truss and cable kits on the tube, to ensure longevity and rigidity for those lengths.

The HD models were historically used for more than loading trucks, which is why the frame is heavier and the lengths are available longer. These can still be used to fill some smaller bins, whereas the shorter length TL models are used to load trucks.

	HD8	HD10	TL10	TL12	TL13
DRIVE	Available drive options are gas engine, electric motor or PTO				DIESEL ONLY
BELT	Banded Double V-Belt	Banded Triple V-Belt	Banded Double V-Belt	Banded Triple V-Belt	HYDRAULIC DRIVE
UNDERCARRIAGE (HSS TUBING)	2 1/2" x 2 1/2" x 1/8"	3" x 3" x 1/8"	2 1/2" x 2 1/2" x 1/8"	3" x 3" x 1/8"	3.5'' x 3.5'' Square Tubing
MOTOR MOUNT	Patented self-levelling motor mount with built in belt tension release				
POWER REQUIRED	20 HP Gas 10 HP Electric	35 HP Gas 20 HP Electric	27-30 HP Gas 20 HP Electric	40-50 HP Gas 20 HP Electric	75HP Diesel
CAPACITY	up to 3,000 bushels per hour |1.4 MT/min	up to 6,000 BPH | 2.7MT/min	up to 6,000 BPH | 2.7MT/min	up to 10,000BPH | 4.5MT/min	Up to 13,000BPH | 5.8MT/Min

Notes: The TL1346 is a new model for Meridian, with many unique features. It is hydraulic drive, has hanger bearings, and will be shown in more detail further in these pages.

There is an MRDN872 model- this is an electric drive auger, primarily used for grain dryer systems. It will be detailed further in these pages

Step Two- Packages and Options

Once you've determined the size of the auger that is required, it is time to choose the package and or options available.

For convenience, most Meridian Truck Load augers are sold as Fully Equipped (FE) packages.

Fully Equipped Packages come with:

- Auger
- Motor (as described)
- Frame Mount Mover Kit
- Spring Loaded Belt Tensioner Kit
- Gas Tank
- Reversing Gearbox and Reversing Gearbox Shifter Kit
- Work Light Package
- Shovel with holder
- Battery and Battery Cables
- Electric Clutch

Note: It does not include setup, delivery, or hydraulic oil.

Most units in Western Canada are sold as Fully Equipped packages. In other regions, augers without mover kits, or augers that are PTO drive are more common. The FE packaged augers have their own price pages, while the bare augers are featured later.

If selecting a bare auger, it is important to note that the base price includes a gas engine mounting kit, a battery mount, reversing gear box, the belts, guards, but DO NOT come with a mover kit, reversing gearbox shifter kit, engine, gas tank, winch, PTO drive, bare hardware box, work lights, spring tensioned idler, electric clutch or battery and cables. Applicable options needed must be added in the accessories section below the base model, as well as other options found on the Movers & Engines and Auger Accessories pages. **It is strongly recommended that if a customer wants a mover kit, they select a FE package.**

Setup: Setup prices are listed in net pricing. If selecting a bare auger, be sure to add the installation rate for each accessory selected to the base setup fee per model, found on the install rates pages.

Engine Options

Customers may have a preference for Rehlko (formerly known as Kohler, they had a rebrand in 2025), or Vanguard gas engines, or for EFI engines (electronic fuel injection) or carbureted engines. The respective configurations are described along with the HP on the FE pages, and on the Mover and Engines pages.

For the TL12-39, Meridian offers a Kubota Diesel option, which has the best performance, but has a significant cost upgrade.

Step Two- Packages and Options (continued)

The Meridian Mover kit is known for its ease of use, stability, and quality. This hydraulic drive mover features handlebar controls and manual steering, which make it simple and familiar to anyone who has operated handlebar controls before. When selecting a mover on a bare auger, be sure to select the appropriate mover with the motor description (small block, big block)

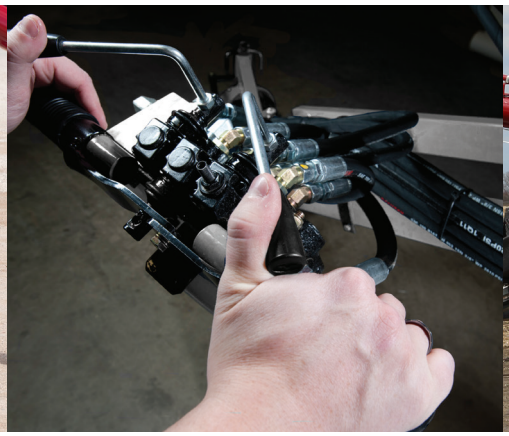

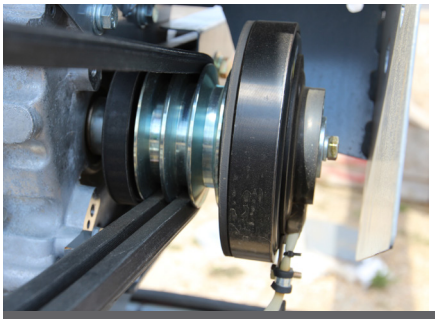

Electric Clutch

Designed specifically for the auger industry, our clutch can accommodate double-belt-drive and triple-belt-drive augers and can shut down the auger flighting, even from inside the bin.

The pump pulley always turns with the crankshaft and is independent of the clutch pulley, allowing the supply of hydraulic power when the clutch is disengaged. In addition, our magnetic switch boxes can be placed anywhere on the auger and uses an exclusive cover to prevent accidental activation.

Reversible Gearbox Shifter

Our reversible gearbox is standard and allows the operator to reverse without flipping the auger belts by hand. An optional shifter lever is mounted down towards the intake, allowing the operator to shift the gearbox even when the auger is in an elevated position.

Shovel and Shovel Holder

Spring Loaded Belt Idler

Specifically designed for longer augers, Meridian's spring loaded belt idler will reduce belt wear and remove whip common with long belts under load.

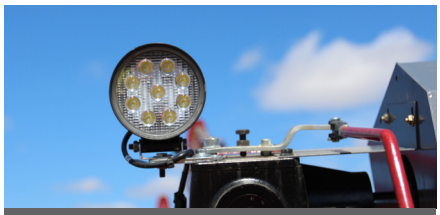

LED Light Kit

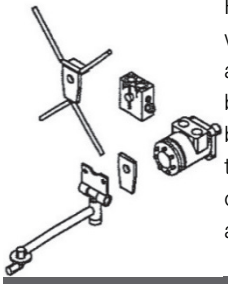

For customers who require the auger to run their bin sweep on flat bottom bins, select the correct size and configuration for their auger.

Hydraulic Plumbing for Bin Sweep

Step Two- Packages and Options (continued, 2)

Meridian Flex Hopper (10” ONLY)
The new Flex Hopper is a low-profile hopper, now available on 10” models. The Flex Hopper can be adjusted to various operating angles.

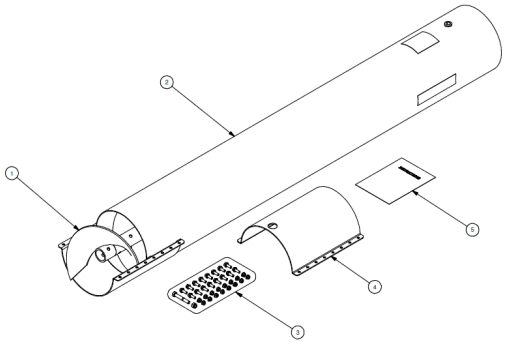

12” 7’ Extension Upgrade
The 12” Extension is used on a TL12-39 to give it more reach to get under large hopper bins. NOTE- this does transform a 39’ to a 16’ auger- the extension is added to the input of the tube, so while it may increase the auger reach under a bin, it actually lowers the overall discharge height.

Step Three- Setup

Setup charges are priced in NET. Fully Equipped package setup includes all the accessories listed in the Fully Equipped Package.

For bare augers, Setup must be priced as the cost to setup the bare auger, then each additional accessory selected has its own setup charge.

8" - Fully Equipped Auger Packages

USA Region

Effective Nov 1, 2025

Part #	DESCRIPTION	LBS	KGS		US Funds
14080399802	HD 8-39' w/Kohler 26.5HP EFI - Fully Equipped Pkg	2084	945	**$**	**18,690**
14080469802	HD 8-46' w/Kohler 26.5HP EFI - Fully Equipped Pkg	2220	1007	**$**	**19,220**
14080539804	HD 8-53' w/Kohler 35HP - Fully Equipped Pkg	2465	1118	**$**	**20,360**
14080539805	HD 8-53' w/Vanguard 35HP - Fully Equipped Pkg	2465	1118	**$**	**20,360**
14080599807	HD 8-59' w/Vanguard 40HP EFI - Fully Equipped Pkg	2644	1199	**$**	**22,355**
14080599806	HD 8-59' w/Kohler 38HP EFI - Fully Equipped Pkg	2644	1199	**$**	**22,175**

DOES NOT Include: Set-up / Delivery / Hydraulic Oil

IMPORTANT

Fully equipped auger packages include auger and motor as named in description, 2 x 15" tires w/rims, gas tank assembly, spring loaded belt tensioner kit, frame mount mover kit, reversing gearbox, reversing gearbox shifter kit, work light package, shovel w/frame mounted clamp, battery, battery cables and electric clutch (double groove on 33', 39', 46' and triple groove on 53'/59')

SETUP AND ACCESSORY INSTALLATION			
14080399900	Set up HD8-39' Fully Equipped Package	**$**	**2,065**
14080469900	Set up HD8-46' Fully Equipped Package	**$**	**2,065**
14080539900	Set up HD8-53' Fully Equipped Package	**$**	**2,230**
14080599900	Set up HD8-59' Fully Equipped Package	**$**	**2,230**

Fully equipped set-up/install packages include set-up of auger named in description and installation of electric clutch, reversing kit, light kit, shovel kit, gas tank, belt tensioner, battery, battery cables and engine. Package also includes auger PDI and hydraulic oil. Does not include Delivery.

Factory Setup and Install Prices are NOT discounted.
All prices are FCA Regina, SK; Quoted and Payable in Funds Specified Above.

10" / 12" / 13" - Fully Equipped Auger Packages

USA Region

Effective Nov 1, 2025

Part #	DESCRIPTION	LBS	KGS	US Funds
14100399806	TL 10-39' w/Kohler 35HP - Fully Equipped Pkg	2325	1054	**$ 20,150**
14100399807	TL 10-39' w/Vanguard 35HP - Fully Equipped Pkg	2325	1054	**$ 20,150**
14100399809	TL 10-39' w/Vanguard 40HP EFI - Fully Equipped Pkg	2302	1044	**$ 21,665**
14100399808	TL 10-39' w/Kohler 38HP EFI - Fully Equipped Pkg	2325	1054	**$ 21,495**
14100469806	HD 10-46' w/Kohler 35HP - Fully Equipped Pkg	2766	1255	**$ 21,490**
14100469808	HD 10-46' w/Vanguard 35HP - Fully Equipped Pkg	2766	1255	**$ 21,490**
14100469807	HD 10-46' w/Vanguard 40HP EFI - Fully Equipped Pkg	2742	1244	**$ 23,000**
14100469809	HD 10-46' w/Kohler 38HP EFI - Fully Equipped Pkg	2766	1255	**$ 22,830**
14100539807	HD 10-53' w/Vanguard 40HP EFI - Fully Equipped Pkg	2990	1356	**$ 23,745**
14100539806	HD 10-53' w/Kohler 38HP EFI - Fully Equipped Pkg	2990	1356	**$ 23,565**
14100599807	HD 10-59' w/Vanguard 40HP EFI - Fully Equipped Pkg	3018	1369	**$ 24,105**
14100599806	HD 10-59' w/Kohler 38HP EFI - Fully Equipped Pkg	3040	1379	**$ 23,925**
14120399806	TL 12-39' w/Kohler 38HP EFI - Fully Equipped Pkg	2971	1348	**$ 22,975**
14120399807	TL 12-39' w/Vanguard 40HP EFI - Fully Equipped Pkg	2968	1346	**$ 23,020**
14120399808	TL 12-39' w/Kubota Diesel 37.5HP - Fully Equipped Pkg	2968	1346	**$ 44,960**
14130460001	TL 13-46' w/Hatz Diesel 74HP - Fully Equipped Pkg **- NEW -**	5590	2536	**$ 54,875**

DOES NOT Include: Set-up / Delivery / Hydraulic Oil

IMPORTANT

Fully Equipped Belt-Drive Auger packages include: auger and motor as named in description, 2 x 15" tires w/rims, fuel tank assembly, spring loaded belt tensioner kit, frame mount mover kit, reversing gearbox shifter kit, work light package, shovel w/frame mounted clamp, battery & cables and triple groove electric clutch.

Fully Equipped Hydraulic-Drive Auger packages include: auger and motor as named in description, angled intake hopper, 2 x 16" tires w/rims, fuel tank assembly, frame mount mover kit, work light package, winter package, shovel w/frame mounted clamp, battery & cables.

SETUP AND ACCESSORY INSTALLATION		
14100399900	Set up TL10-39' - Fully Equipped Package	**$ 2,065**
14100469900	Set up HD10-46' - Fully Equipped Package	**$ 2,230**
14100539900	Set up HD10-53' - Fully Equipped Package	**$ 2,230**
14100599900	Set up HD10-59' - Fully Equipped Package	**$ 2,230**
14120399900	Set up TL12-39' - Fully Equipped Package	**$ 2,745**
14120399904	Set up TL12-39' - Diesel Fully Equipped Package	**$ 3,365**
14900114790	Set up TL13-46' - Diesel Fully Equipped Package	**$ 4,425**

IMPORTANT

Fully Equipped Belt-Drive Auger set-up/install packages include: set-up of auger named in description, installation of electric clutch, reversing kit, light kit, shovel kit, fuel tank, belt tensioner, battery & cables, engine, auger PDI and hydraulic oil. Does not include Delivery.

Fully Equipped Hydraulic-Drive Auger set-up/install packages include: set-up of auger named in description, winter package, light kit, shovel kit, fuel tank, battery & cables, engine, auger PDI and hydraulic oil. Does not include Delivery.

Factory Setup and Install Prices are NOT discounted.
All prices are FCA Regina, SK; Quoted and Payable in Funds Specified Above.

8" - Heavy Duty Belt Drive Augers

USA Region

Effective Nov 1, 2025

Part #	DESCRIPTION	LBS	KGS		US Funds
14000801007	HD8-33 Meridian Grain Auger - 32.80 ft. (10m)	1047	475	**$**	**5,275**
14000801207	HD8-39 Meridian Grain Auger - 39.37 ft. (12m)	1172	532	**$**	**5,685**
14000801407	HD8-46 Meridian Grain Auger - 45.93 ft. (14m)	1324	601	**$**	**6,230**
14000801607	HD8-53 Meridian Grain Auger - 52.50 ft. (16m)	1518	689	**$**	**6,730**
14000801807	HD8-59 Meridian Grain Auger - 59.06 ft. (18m)	1762	800	**$**	**7,410**

DOES NOT include: Set-up / Delivery

IMPORTANT

Above prices include Meridian's reversing gearbox, gas engine mounting kit, drive shaft guards, pulley guard, intake guard, battery mount, 12" double groove v-pulley, banded v-belt & P225/75 R15 radial tires w/rims. HD truss cables are standard on HD8-53 & HD 8-59.

DOES NOT Include: Winch (hardware box) / Reversing gearbox shifter kit / Gas engine / PTO drive

FOR ALL bare augers, applicable bare hardware box listed below must be added.

	SETUP				
14900008010	Set-up HD8-33			**$**	**495**
14900008012	Set-up HD8-39			**$**	**495**
14900008014	Set-up HD8-46			**$**	**495**
14900008016	Set-up HD8-53			**$**	**580**
14900008018	Set-up HD8-59			**$**	**580**
13000005365	Install PTO Kit			**$**	**190**
13000042377	Install Reversing Gearbox Shifter Kit			**$**	**100**
	ACCESSORIES				
13000005038	Reversible Gearbox Shifter Kit	10	4.5	**$**	**340**
13000005238	8-33/39 Bare Auger Hardware Box (Includes winch and belt guard.)	11	5	**$**	**485**
13000005239	8-46/53/59 Bare Auger Hardware Box (Includes winch, belt guard & belt idler.)	18	8	**$**	**535**
14800000108	8" Polyethylene telescoping spout, 42" long	8	4	**$**	**140**
14800000304	8" PTO Attachment Kit (does not include PTO shaft)	80	23	**$**	**485**
14800000318	540 PTO Shaft for 7"-12" kits; 90" maximum, telescoping non-separable, safety shielded, 1-3/8" x 6" spline, quick-disconnect yoke on both ends c/w ball bearing shearing device	52	24	**$**	**700**
13000006451	Wheel Option / Jack Kit - 8" Auger	50	23	**$**	**530**
13000008077	8" Intake Hopper c/w extended hitch & skid plate.	86	39	**$**	**660**

Factory Setup and Install Prices are NOT discounted.
All prices are FCA Regina, SK; Quoted and Payable in Funds Specified Above.

10" - Heavy Duty Belt Drive Augers

USA Region

Effective Nov 1, 2025

Part #	DESCRIPTION	LBS	KGS		US Funds
14001001407	HD10-46 Meridian Grain Auger - 45.93 ft. (14m)	1826	829	**$**	**7,905**
14001001607	HD10-53 Meridian Grain Auger - 52.50 ft. (16m)	2006	910	**$**	**8,670**
14001001808	HD10-59 Meridian Grain Auger - 59.06 ft. (18m)	2057	933	**$**	**9,050**

DOES NOT include: Set-up / Delivery

IMPORTANT

Above prices include Meridian's reversing gearbox, gas engine mounting kit, drive shaft guards, pulley guard, intake guard, battery mount, 14" triple groove v-pulley, banded v-belt & P225/75 R15 radial tires w/rims. HD truss cables are standard on HD10-53 & HD10-59.

DOES NOT Include: Winch (hardware box) / Reversing gearbox shifter kit / Gas engine / PTO drive

FOR ALL bare augers, applicable bare hardware box listed below must be added.

	SETUP				
14900010014	Set-up HD10-46			**$**	**580**
14900010016	Set-up HD10-53			**$**	**580**
14900010018	Set-up HD10-59			**$**	**580**
13000005365	Install PTO Kit			**$**	**190**
13000042377	Install Reversing Gearbox Shifter Kit			**$**	**100**
	ACCESSORIES				
13000005038	Reversible Gearbox Shifter Kit	10	4.5	**$**	**340**
13000005227	10-46/53/59 Bare Auger Hardware Box (Includes winch, belt guard & belt idler.)	24	11	**$**	**565**
14800000110	10" Polyethylene telescoping spout, 42" long	10	5	**$**	**150**
14800000306	10"HD PTO Attachment Kit (does not include PTO shaft)	95	43	**$**	**670**
14800000318	540 PTO Shaft for 7"-12" kits; 90" maximum, telescoping non-separable, safety shielded, 1-3/8" x 6" spline, quick-disconnect yoke on both ends c/w ball bearing shearing device	52	24	**$**	**700**
13000007839	10" Intake Hopper c/w extended hitch & skid plate.	86	39	**$**	**660**
13000006450	Wheel Option / Jack Kit - 10" Auger	50	23	**$**	**505**

Factory Setup and Install Prices are NOT discounted.
All prices are FCA Regina, SK; Quoted and Payable in Funds Specified Above.

10" & 12" - Truck Loading Belt Drive Augers

USA Region

Effective Nov 1, 2025

Part #	DESCRIPTION	LBS	KGS		US Funds
14001001007	TL10-33 Meridian Grain Auger - 32.83 ft. (10m)	1060	480	**$**	**5,230**
14001001207	TL10-39 Meridian Grain Auger - 39.37 ft. (12m)	1376	624	**$**	**6,505**
14001201207	TL12-39 Meridian Grain Auger - 39.37 ft. (12m)	1705	774	**$**	**8,710**

DOES NOT include: Set-up / Delivery

IMPORTANT

Above prices include reversing gearbox, gas engine mounting kit, drive shaft guards, pulley guard, intake guard, battery mount & **P225/75 R15 radial tires w/rims**. The TL10 come with a 14" double groove v-pulley and the TL12 come with a 14" triple groove v-pulley; each with a banded v-belt.

DOES NOT Include: Winch (hardware box) / Reversing gearbox shifter kit / Gas engine / PTO drive

FOR ALL bare augers, applicable bare hardware box listed below must be added.

	SETUP				
14900010010	Set-up TL10-33			**$**	**495**
14900010012	Set-up TL10-39			**$**	**495**
14900012012	Set-up TL12-39			**$**	**495**
13000005365	Install PTO Kit			**$**	**190**
13000042377	Install Reversing Gearbox Shifter Kit			**$**	**100**
14900114826	Install 10" Intake Flex Hopper HD/TL10			**$**	**95**
14900114782	Install MRDN TL1239 - 7'-0" Intake Extension Kit			**$**	**150**
	ACCESSORIES				
13000005038	Reversible Gearbox Shifter Kit	10	4.5	**$**	**340**
13000005285	10-39 Bare Auger Hardware Box (Includes winch and belt guard)	12	6	**$**	**470**
13000005366	12-39 Bare Auger Hardware Box (Includes winch and belt guard & belt idler.)	34	15	**$**	**550**
14800000110	10" Polyethylene telescoping spout, 42" long	10	5	**$**	**150**
14800000112	12" Polyethylene telescoping spout, 42" long	10	5	**$**	**215**
14800000305	10"TL PTO Attachment Kit (does not include PTO shaft)	99	41	**$**	**630**
14800000307	12"TL PTO Attachment Kit (does not include PTO shaft)	104	47	**$**	**670**
14800000318	540 PTO Shaft for 7"-12" kits; 90" maximum, telescoping non-separable, safety shielded, 1-3/8" x 6" spline, quick-disconnect yoke on both ends c/w ball bearing shearing device	52	24	**$**	**700**
13000006450	Wheel Option / Jack Kit - 10" Auger	50	23	**$**	**505**
13000006454	Wheel Option / Jack Kit - 12" Auger	50	23	**$**	**620**
13000007839	10" Intake Hopper c/w extended hitch & skid plate.	86	39	**$**	**660**
130000011010	10" Intake Flex Hopper HD/TL10	427	194	**$**	**2,590**
130000011402	MRDN TL1239 Intake - 7'-0" Extension Kit	448	203	**$**	**1,350**

Factory Setup and Install Prices are NOT discounted.
All prices are FCA Regina, SK; Quoted and Payable in Funds Specified Above.

Auger Movers and Engines

USA Region

Effective Nov 1, 2025

Frame Mount Movers			US Funds
Part #	**DESCRIPTION**		
13000043120	Frame Mount Mover - Small Block - 33'-39'	**$**	**6,775**
13000043121	Frame Mount Mover - Small Block - 46'	**$**	**6,775**
13000043122	Frame Mount Mover - Small Block - 53'-59'	**$**	**6,775**
13000043125	Frame Mount Mover - Big Block - 33'-39'	**$**	**6,775**
13000043126	Frame Mount Mover - Big Block - 46'	**$**	**6,775**
13000043127	Frame Mount Mover - Big Block - 53'-59'	**$**	**6,775**

Frame mount mover includes hydraulic lift assembly, hydraulic pump kit, hydraulic winch kit, 4-wheel heavy duty walking beam, wheel drive kit, steering controls and all required hoses/pulleys.

Engines			
Part #	**DESCRIPTION**		
13000042559	26.5HP EFI Kohler - Small Block	**$**	**4,070**
13000042354	35HP Vanguard - Small Block	**$**	**4,340**
130000011202	40HP EFI Vanguard	**$**	**5,865**
13000042345	35HP Kohler - Big Block	**$**	**4,340**
13000005458	38HP EFI Kohler - Big Block	**$**	**5,555**
13000008971	37.5HP Kubota Diesel Engine	**$**	**27,430**

Gas engines include oil change drain hose and winter kit.

Diesel engine includes block heater and circulating pump.

Fuel Tanks			
Part #	**DESCRIPTION**		
13000042168	50 L Gas Tank Kit - c/w mounting brackets, clamps and 4' fuel line	**$**	**250**
13000042170	50 L Diesel Tank Kit - c/w mounting brackets, clamps and 4' fuel line	**$**	**275**

Factory Setup and Install Prices are NOT discounted.
All prices are FCA Regina, SK; Quoted and Payable in Funds Specified Above.

Auger Accessories

USA Region

Effective Nov 1, 2025

Meridian Spring Loaded Belt Tensioner — US Funds

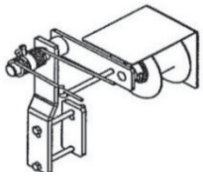

Part #	Description		
13000042051	Spring Loaded Belt Tensioner	**$**	**300**

Specify auger model and frame style when ordering.

Meridian Triple Groove Engine Style Clutch — US Funds

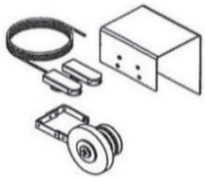

Part #	Description		
13000042055	Clutch - Groove Triple Engine	**$**	**1,160**

Specify auger model and engine make/model when ordering

This kit includes a 3 groove clutch complete with wiring harness, 2 switches and switch boxes. There is a built in fuse on one of the switches. Clutch will handle up to 40 HP gas engine. Engine shaft must be 1-1/8" diameter and at least 3-5/8" long.

NOTE: No warranty on clutch kits used with diesel engines.

Meridian Double Groove Engine Style Clutch — US Funds

Part #	Description		
13000042059	Clutch - Groove Double - Engine	**$**	**1,060**

Specify auger model and engine make/model when ordering

This kit includes a 2 groove clutch complete with wiring harness, 2 switches and switch boxes. There is a built in fuse on one of the switches. Clutch will handle up to 30 HP gas engine. Engine shaft must be 1-1/8" diameter and at least 3-5/8" long.

Shovel w/Frame Clamp — US Funds

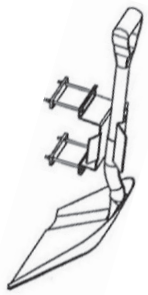

Part #	Description		
13000042072	Complete Kit w/Shovel and Clamp Assembly	**$**	**165**
13000042073	Spring loaded Clamp Assembly Only	**$**	**140**
13000042074	Shovel Only	**$**	**40**

Kit includes a large grain shovel and a spring loaded clamp to secure it to the auger frame.
Shovel bracket is universal to fit any auger frame.

Factory Setup and Install Prices are NOT discounted.
All prices are FCA Regina, SK; Quoted and Payable in Funds Specified Above.

Auger Accessories

USA Region

Effective Nov 1, 2025

Auger Light Kits — **US Funds**

Part #	Description		
13000005700	LED light system for Belt Drive Auger - 33'	**$**	**590**
13000005701	LED light system for Belt Drive Auger - 39'	**$**	**590**
13000005702	LED light system for Belt Drive Auger - 46'	**$**	**590**
13000005703	LED light system for Belt Drive Auger - 53'	**$**	**590**
13000005704	LED light system for Belt Drive Auger - 59'	**$**	**590**
13000005706	LED Work Light Kit - Augers - 65' / 66'	**$**	**590**
13000005707	LED Work Light Kit - Augers - 72' / 75'	**$**	**590**
13000005708	LED Work Light Kit - Augers - 79'	**$**	**590**
13000005709	LED Work Light Kit - Augers - 85'	**$**	**590**
13000005710	LED Work Light Kit - Augers - 95'	**$**	**590**
13000005711	LED Work Light Kit - Augers - 105'	**$**	**590**
13000005712	LED Work Light Kit - Augers - 115'	**$**	**590**

For augers built prior to 2015 please contact Meridian for additional parts

Auger Accessories

USA Region

Effective Nov 1, 2025

Hydraulic Plumbing for Bin Sweep — **US Funds**

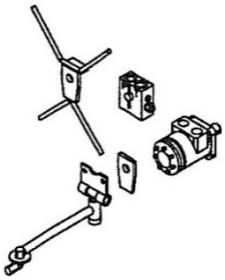

Part #	Description		
13000043166	HD7-33 c/w Motor	**$**	**770**
13000043204	HD7-33 w/o Motor	**$**	**550**
13000043209	HD7-39 c/w Motor	**$**	**770**
13000043212	HD7-39 w/o Motor	**$**	**550**
13000043163	HD7-46 c/w Motor	**$**	**770**
13000043202	HD7-46 w/o Motor	**$**	**590**
13000043167	HD8-33 c/w Motor	**$**	**770**
13000043208	HD8-33 w/o Motor	**$**	**590**
13000043221	HD8-39 c/w Motor	**$**	**770**
13000043224	HD8-39 w/o Motor	**$**	**590**
13000043164	HD8-46 c/w Motor	**$**	**770**
13000043207	HD8-46 w/o Motor	**$**	**590**
13000043222	HD8-53 c/w Motor	**$**	**770**
13000043225	HD8-53 w/o Motor	**$**	**590**
13000043223	HD8-59 c/w Motor	**$**	**770**
13000043226	HD8-59 w/o Motor	**$**	**590**
13000043165	HD10-46 c/w Motor	**$**	**770**
13000043203	HD10-46 w/o Motor	**$**	**590**
13000043216	HD10-53 c/w Motor	**$**	**770**
13000043219	HD10-53 w/o Motor	**$**	**590**
13000043217	HD10-59 c/w Motor	**$**	**770**
13000043220	HD10-59 w/o Motor	**$**	**590**
13000043215	TL10-39 c/w Motor	**$**	**770**
13000043218	TL10-39 w/o Motor	**$**	**590**
13000043169	TL12-39 c/w Motor	**$**	**770**
13000043205	TL12-39 w/o Motor	**$**	**590**
130000013639	TL1239 w/ 7' Intake Ext c/w Motor	**$**	**795**
130000013640	TL1239 w/ 7' Intake Ext w/o Motor	**$**	**630**

Kit includes the following:

- Bin Sweep flow control valve c/w safety kick out.
- Motor pivot arm & hang up bracket for hydraulic motor. (Not shown.)
- Hose Kit c/w hydraulic fittings. (Not shown.)

Meridian Accessory Install & Setup Rates

USA Region

Effective Nov 1, 2025

Part #	Meridian Accessory Install Rates DESCRIPTION	US Funds
13000042372	Install Frame Mount Mover	$ 635
13000042376	Install Electric Clutch	$ 170
13000042377	Install Reversing Gearbox Shifter Kit	$ 100
13000042705	Install Light kit - Belt Drive or SLMD Auger	$ 115
13000042756	Install Gas Engine	$ 120
13000042378	Install Diesel Engine	$ 830
13000042755	Install Hopper Mover for Swing Augers	$ 200
13000042760	Install Hydraulic Winch kit on SLMD Auger	$ 105
13000042761	Install Shovel Kit	$ 40
13000042757	Install Fuel Tank	$ 55
13000042758	Install Belt Tensioner	$ 55
13000005365	Install PTO Kit	$ 190
13000042762	Install Plumbing for Bin Sweep (With or w/o motor)	$ 305
13000042375	Supply and Install gear oil, hydraulic oil, battery and battery cables	$ 365
14900000087	Pre-Delivery Inspection (PDI) for Belt Drive Augers	$ 80
14900000088	Pre-Delivery Inspection (PDI) for SLMD Augers	$ 80
14900114826	Install 10" Intake Flex Hopper HD/TL10	$ 95
14900114782	Install MRDN TL1239 - Intake Extension Kit 7'-0"	$ 150
14900114568	Install PTO Drive Kit MRDN 10" & 13"	$ 315
14900114572	Install Reverser Kit MRDN 10" & 13"	$ 55
14900114594	Install 1000 PTO Kit MRDN 13"	$ 420
14900114576	Install Winch MRDN 10" & 13"	$ 55
14900114580	Install Transport Safety Kit MRDN 10" & 13"	$ 105
14900114658	Install Cable Weight Kit MRDN 10"	$ 10
14900114706	Install Transport Safety Chains MRDN 10"	$ 40
14900114778	Install - Extended Wear Kit	$ 220
14900114794	Install Right Angle PTO Drive Kit	$ 205
	Meridian Auger Set-up Rates	
14080399900	Set-Up HD8-39' - Fully Equipped Package	$ 2,065
14080469900	Set-Up HD8-46' - Fully Equipped Package	$ 2,065
14080539900	Set-Up HD8-53' - Fully Equipped Package	$ 2,230
14080599900	Set-Up HD8-59' - Fully Equipped Package	$ 2,230
14900008010	Set-Up HD8-33	$ 495
14900008012	Set-Up HD8-39	$ 495
14900008014	Set-Up HD8-46	$ 495
14900008016	Set-Up HD8-53	$ 580
14900008018	Set-Up HD8-59	$ 580
14900114622	Set-Up MRDN 872	$ 580

Factory Setup and Install Prices are NOT discounted.
All prices are FCA Regina, SK; Quoted and Payable in Funds Specified Above.

Meridian Accessory Install & Setup Rates

USA Region

Effective Nov 1, 2025

14100399900	Set-Up TL10-39' - Fully Equipped Package	**$**	**2,065**
14100469900	Set-Up HD10-46' - Fully Equipped Package	**$**	**2,230**
14100539900	Set-Up HD10-53' - Fully Equipped Package	**$**	**2,230**
14100599900	Set-Up HD10-59' - Fully Equipped Package	**$**	**2,230**
14120399900	Set-Up TL12-39' - Fully Equipped Package	**$**	**2,745**
14120399904	Set-Up TL12-39' - Diesel Fully Equipped Package	**$**	**3,365**
14900114790	Set up TL13-46' - Diesel Fully Equipped Package	**$**	**4,425**
14900010014	Set-Up HD10-46	**$**	**580**
14900010016	Set-Up HD10-53	**$**	**580**
14900010018	Set-Up HD10-59	**$**	**580**
14900010010	Set-Up TL10-33	**$**	**495**
14900010012	Set-Up TL10-39	**$**	**495**
14900012012	Set-Up TL12-39	**$**	**495**
14900110020	Set-Up SLMD10-66	**$**	**1,720**
14900110022	Set-Up SLMD10-72	**$**	**1,720**
14900114610	Set-Up MRDN1065	**$**	**1,390**
14900114750	Set-Up MRDN1075	**$**	**1,800**
14900114754	Set-Up MRDN1085	**$**	**1,840**
14900112022	Set-Up SLMD12-72	**$**	**1,965**
14900112026	Set-Up SLMD12-85	**$**	**2,050**
14900112095	Set-Up SLMD12-95	**$**	**2,210**
14900114556	Set-Up MRDN1375	**$**	**1,635**
14900114734	Set-Up MRDN1375 Ext	**$**	**1,635**
14900114614	Set-Up MRDN1385	**$**	**2,010**
14900114738	Set-Up MRDN1385 Ext	**$**	**2,010**
14900114758	Set-Up MRDN1395	**$**	**2,420**
14900114742	Set-Up MRDN1395 Ext	**$**	**2,420**
14900114762	Set-Up MRDN13115	**$**	**3,080**
14900114746	Set-Up MRDN13115 Ext	**$**	**3,080**
14900114029	Set-Up SLMD14-95	**$**	**4,780**
14900114035	Set-Up SLMD14-115	**$**	**4,945**

Factory Setup and Install Prices are NOT discounted.
All prices are FCA Regina, SK; Quoted and Payable in Funds Specified Above.

Introduction

Meridian offers Swing Augers in various sizes and configurations. The following pages will help you determine the best fit for your customer based on capacity, length, and available options.

A Swing Auger is an auger that's primary use is filling bins or making large grain piles. It features a hopper that is connected to the main tube and can 'swing' under a truck belly, or be stationed at the back of a dump trailer.

Step One - Size & Model

Meridian Swing Augers are available in 10", 12", 13" and 14" models. The model number consists of the auger series, tube diameter, and the tube length. Farmers who demand faster unload speeds should consider the larger diameter augers. When choosing a length, it is important to consider the size of the bins a farmer currently has, or plans to expand to. It is also important to note that most bins require additional height added to accommodate for a pad or slope in the yard. Please consult the specifications carefully- there may be instances where the auger can reach the height of the bin, but due to the eve height and distance from the bin lid, that may cause additional restrictions. This is also why it is important to review each model's specifications, as some lengths may have different heights from series to series.

Meridian's Swing Augers have three distinct series.

The 10'' and 13'' Diameter Augers are very similar in design and available options. The 10" and 13" feature similar frame designs, hoppers, head-ends, and gearboxes. The Swing features RH flighting, and with a 90 degree gearbox and U-Joint, the main flighting on the tube is LH.

These augers are packaged to be economical, but with many options available.

The 10" is only available in 540 PTO, while the 13" is available in 540 or 1000RPM.

the 540 PTO DOES NOT come standard with reversible drive. If that is desired, please ensure that the option is selected. The 13" 1000PTO option INCLUDES reversible drive.

The 13" is available in an Extendable Swing (Rodono) version. These augers are priced separately, on its own sheet.

Meridian's Blow-Out doors open when the bin is full, allowing material to flow out and not pile up the auger flighting.

Step One - Size & Model (Continued)

The 12'' SLMD Auger is a long-standing design from Meridian. SLMD stands for Scissor-Lift-Mechanical-Drive. This series of auger features a unique 'Reverse Scissor' design, where the frame pushes out toward the frame.

The 12" Discharge DOES NOT have Meridian's patented blow-out doors.

The hopper is low-profile, but unique to the SLMD series.

The unit has an angled gearbox, and is available in 540RPM with the reversible drive as standard.

The 14'' SLMD Auger from Meridian is the largest diameter available. The 14" shares some options with the other series, but is unique and heavy-duty enough that it is a stand alone machine.

The 14" features the patented blow-out doors, it has an angled gear box, patented formed frame, extendable axle, and a heavy-truss system.

The 14" is only available in 1000PTO. It comes standard with a reversible drive, Kramble Mover, Hydraulic Winch, and more. We price it this way because of the heavy-duty/commercial application- this is not made to be an economy series.

The 14" is available with a 16" Extendable Swing (Rodono) Those models are found separately, on their own sheet.

Step Two- Packages and Options

As described above, the 10/13 augers, 12SLMD auger, and 14” auger are all packaged differently. Please read the standard equipment description below the model lengths before moving onto options available.

10” Augers:
Standard equipment includes a 36” W x 62” L x 9-3/8” H hopper, head-end blow-out doors, single hydraulic lift on grain auger, intake boot, screw jack, hydraulic hoses, heavy duty truss cables & 16” tires/rims. It DOES NOT include PTO Drive/Shaft, Winch / set-up or delivery. While the reversible gearbox is optional, the PTO drive, winch and setup are required to properly quote.

13” Augers:
Standard equipment includes a 41.5” W x 62” L x 13” H hopper, head-end blow-out doors, dual hydraulic lift on grain auger, intake boot, screw jack, hydraulic hoses, heavy duty truss cables & 16” tires/rims. It DOES NOT include PTO Drive/Shaft, Winch / set-up or delivery. While the reversible gearbox is optional, the PTO drive, winch and setup are required to properly quote. NOTE: If 1000PTO is selected, that does come with the reversible gearbox.

12” SLMD Augers:
Standard equipment includes 5a2”L x 41.5”W x 13”H hopper, hydraulic lift on grain auger, brake winch to raise/lower swing auger, reversible drive, intake boot, screw jack, hydraulic hoses, 540~PTO shaft with shear pin/spline quick disconnect ends, & 16” tires/rims. It DOES NOT include delivery or set-up.

14” Augers:
Standard equipment includes a 74” x 46” x 12-3/4” swing hopper with Kramble 12V swing mover, hydraulic worm winch for swing, tires & rims, reversible gearbox, patented blow out doors, screw jack, hydraulic hoses, heavy duty truss cables and extendable axles.

Hydraulic Winch and Lift Arm

LED Light Kit

Electric Swing Hopper Mover

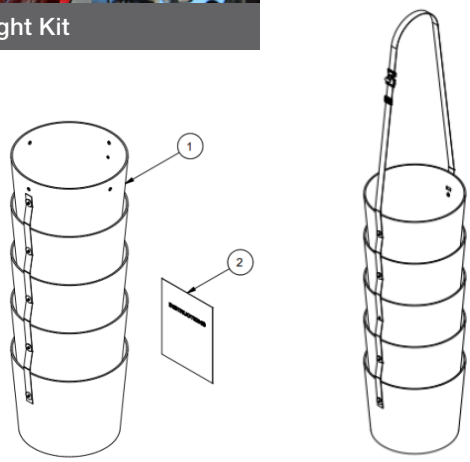

Poly-Spouts

NOTE: 10, 13 and 14” models require spouts to be bolted on to accommodate the blow-out doors. 12” can use a strap as shown.

Step Two- Packages and Options (continued)

Meridian Extendable Swing

The 13” and 14” augers are available with the Meridian Extendable Swing (manufactured by Rodono industries)

It allows the swing to extend and retract, saving time versus swinging the auger back and forth for placement under the grain truck.

These are priced separately, with the 14” auger featuring a 16” extendable swing tube, while the 13” auger comes with a 13” extendable swing.

FEATURES
- 16” Diameter for 14” auger | 13” for 13” Auger
- 17’ Length | 9’ Travel | 2’ Working Range
- 15,000BPH (14”) | 13,000BPH (13”)
- Two 9” feed screws and one 7” center screw
- Powder coat finish
- 3 Way Hydraulic controls
- Quick retract for safe and easy truck access
- Quick extend for fast and efficient unloading
- Reach both trailer hoppers without moving the truck

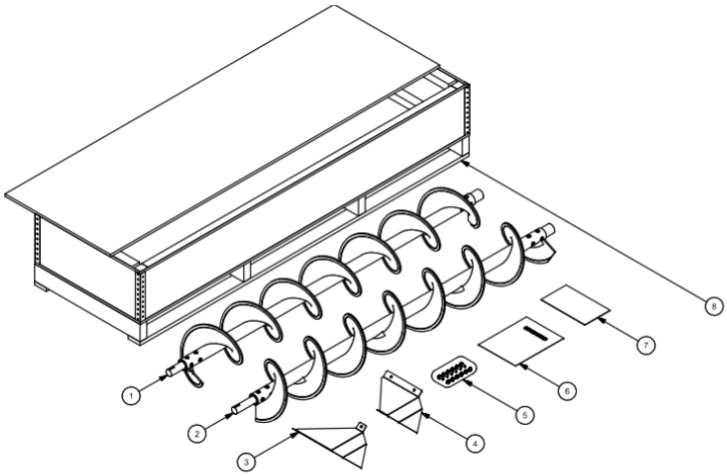

Extended Wear Kit

Meridian augers are available with extended wear kits in the swing hopper.

These kits feature stainless steel flighting, whereas they come standard in mild steel.

Step Three- Setup

Setup charges are priced in NET. Ensure that the base model setup charge, and any additional options selected are added to the cost for accurate pricing.

10" - MRDN Swing Augers - Standard Hopper

USA Region

Effective Nov 1, 2025

Part #	DESCRIPTION	LBS	KGS	US Funds
14100650000	MRDN1065 c/w Standard Feed System	4004	1849	**$ 17,540**
14100750000	MRDN1075 c/w Standard Feed System	4339	1938	**$ 18,830**
14100850000	MRDN1085 c/w Standard Feed System	4004	1849	**$ 20,800**

DOES NOT include: PTO Drive / PTO shaft / Winch / Set-up / Delivery

IMPORTANT

Above augers include 10" mechanical drive swing auger with standard 36" W x 62" L x 9-3/8" H hopper, head-end blow-out doors, single hydraulic lift on grain auger, intake boot, screw jack, hydraulic hoses, heavy duty truss cables & 16" tires/rims.

	PTO DRIVE	
13000009482	540 PTO drive w/ Series 55 Heavy Duty PTO Shaft If choosing reversing option: select **13000009482 & 13000009747** If **NOT** choosing reversing option: select **13000009482** & **13000009748**	**$ 2,120**
13000009747	540 Reverser Option w/ Tensioner	**$ 885**
13000009748	540 Idler	**$ 395**
	WINCH	
13000009188	Hand Winch	**$ 490**
13000009446	Hydraulic Winch	**$ 1,720**
	ACCESSORIES	
13000009680	Transport safety kit c/w side marker lights & signals	**$ 1,950**
13000005040	Kramble 10" - 12V Swing Mover (with 1 remote)	**$ 3,250**
13000005706	LED Work Light Kit - Augers - 65' / 66'	**$ 590**
13000005707	LED Work Light Kit - Augers - 72' / 75'	**$ 590**
13000005709	LED Work Light Kit - Augers - 85'	**$ 590**
13000009688	Poly flex spout 10" Standard	**$ 250**
130000010008	Poly Fflex spout 10" No-Snag	**$ 160**
130000010599	Cable weight kit	**$ 235**
13000009855	Transport Safety Chains	**$ 145**
13000006449	Additional Remote - Key Fob Kramble Mover	**$ 270**
130000012065	MRDN10 Hopper Extended Wear Kit (in lieu of standard hopper flight)	**$ 1,085**

	SETUP & INSTALL - NET PRICES	
14900114610	Set-Up MRDN1065	**$ 1,390**
14900114750	Set-Up MRDN1075	**$ 1,800**
14900114754	Set-Up MRDNT1085	**$ 1,840**
14900114568	Install PTO Drive Kit MRDN 10" & 13"	**$ 315**
14900114572	Install Reverser Kit MRDN 10" & 13"	**$ 55**
14900114576	Install Winch MRDN 10" & 13"	**$ 55**
14900114580	Install Transport Safety Kit MRDN 10" & 13"	**$ 105**
13000042755	Install hopper mover for swing auger	**$ 200**
13000042705	Install LED work light kit	**$ 115**
14900114658	Install Cable Weight Kit MRDN 10"	**$ 10**
14900114706	Install Transport Safety Chains MRDN 10"	**$ 40**
14900000088	Pre-delivery inspection (PDI) for SLMD augers	**$ 80**

Factory Setup and Install Prices are NOT discounted.
All prices are FCA Regina, SK; Quoted and Payable in Funds Specified Above.

13" - MRDN Swing Augers - Standard Hopper

USA Region

Effective Nov 1, 2025

Part #	DESCRIPTION	LBS	KGS	US Funds
14130750012	1375 c/w Standard Feed 540 Drive	7033	3190	**$ 27,610**
14130750013	1375 c/w Standard Feed 1000 Drive	7049	3197	**$ 27,610**
14130850012	1385 c/w Standard Feed 540 Drive	7395	3354	**$ 30,850**
14130850013	1385 c/w Standard Feed 1000 Drive	7410	3361	**$ 30,850**
14130955012	1395 c/w Standard Feed 540 Drive	10783	4891	**$ 39,095**
14130955013	1395 c/w Standard Feed 1000 Drive	10798	4897	**$ 39,095**
14131155012	13115 c/w Standard Feed 540 Drive	11446	5191	**$ 42,830**
14131155013	13115 c/w Standard Feed 1000 Drive	11461	5198	**$ 42,830**

DOES NOT Include: PTO Drive / PTO shaft / Winch / Set-up OR Delivery

IMPORTANT

Above augers include 13" mechanical drive swing auger with standard 41.5" W x 62" L x 13" H hopper, head-end blow-out doors, dual hydraulic lift on grain auger, intake boot, screw jack, hydraulic hoses, heavy duty truss cables & 16" tires/rims.

	PTO DRIVE			
130000013504	540 PTO drive w/ Series 55 Heavy Duty PTO Shaft If choosing reversing option: select **130000013504** & **13000009602** If **NOT** choosing reversing option: select **130000013504** & **13000009603**	95	43	**$ 3,070**
13000009602	540 Reverser Option w/ Tensioner	81	36	**$ 950**
13000009603	540 Idler	52	23	**$ 485**
	OR			
130000013995	1000 PTO Drive Kit c/w 1000 RPM reducing gear box	610	276	**$ 5,180**
130000010842	1 3/8 PTO Shaft			**$ 1,590**
130000010843	1 3/4 PTO Shaft			**$ 1,590**
	WINCH			
13000009188	Hand Winch	16	7	**$ 490**
13000009446	Hydraulic Winch	294	133	**$ 1,720**
	ACCESSORIES			
13000009376	Transport safety kit c/w side marker lights & signals - 75' / 85'	55	25	**$ 1,950**
130000014003	Transport safety kit c/w side marker lights & signals - 95'/115'			**$ 2,135**
13000009665	12V Kramble swing mover - dual drive (with 1 remote)	40	18	**$ 3,950**
13000005707	LED Work Light Kit - Augers - 72' / 75'	23	10	**$ 590**
13000005709	LED Work Light Kit - Augers - 85'	23	10	**$ 590**
13000005710	LED Work Light Kit - Augers - 95'	23	10	**$ 590**
13000005712	LED Work Light Kit - Augers - 115'	23	10	**$ 590**
13000009593	Poly flex spout 13"	12	5	**$ 250**
13000009855	Transport Safety Chains	22	10	**$ 145**
13000006449	Additional Remote - Key Fob Kramble Mover			**$ 270**
130000012059	MRDN13 Hopper Extended Wear Kit (in lieu of standard hopper flight)	144	65	**$ 1,470**
130000012105	Right Angle PTO Drive Kit	647	293	**$ 3,760**
130000010599	Cable Weight Kit	10	5	**$ 235**

see next page for setup and install rates

Factory Setup and Install Prices are NOT discounted.
All prices are FCA Regina, SK; Quoted and Payable in Funds Specified Above.

13" - MRDN Swing Augers - Standard Hopper

USA Region

Effective Nov 1, 2025

Part #	DESCRIPTION	LBS	KGS	US Funds
	SETUP & INSTALL - NET PRICES			
14900114734	Set-Up MRDN1375 Ext			**$ 1,635**
14900114738	Set-Up MRDN1385 Ext			**$ 2,010**
14900114742	Set-Up MRDN1395 Ext			**$ 2,420**
14900114746	Set-Up MRDN13115 Ext			**$ 3,080**
14900114568	Install 540 PTO Drive Kit MRDN 10" & 13"			**$ 315**
14900114572	Install Reverser Kit MRDN 10" & 13"			**$ 55**
14900114594	Install 1000 PTO Kit MRDN 13"			**$ 420**
14900114576	Install Winch MRDN 10" & 13"			**$ 55**
14900114580	Install Transport Safety Kit MRDN 10" & 13"			**$ 105**
13000042705	Install light kit - belt drive or SLMD auger			**$ 115**
13000042755	Install hopper mover for swing augers			**$ 200**
14900000088	Pre-delivery inspection (PDI) for SLMD augers			**$ 80**
14900114778	Install - Extended Wear Kit			**$ 220**
14900114794	Install Right Angle PTO Drive Kit			**$ 205**
14900114658	Install Cable Weight Kit			**$ 10**

Factory Setup and Install Prices are NOT discounted.
All prices are FCA Regina, SK; Quoted and Payable in Funds Specified Above.

13" - MRDN Swing Augers - EXTENDABLE SWING

USA Region

Effective Nov 1, 2025

Part #	DESCRIPTION	LBS	KGS	US Funds
14130750016	1375 c/w Feed Ext 540 Drive			**$ 36,745**
14130750017	1375 c/w Feed Ext 1000 Drive			**$ 36,745**
14130850016	1385 c/w Feed Ext 540 Drive			**$ 39,890**
14130850017	1385 c/w Feed Ext 1000 Drive			**$ 39,890**
14130955016	1395 c/w Feed Ext 540 Drive			**$ 48,585**
14130955017	1395 c/w Feed Ext 1000 Drive			**$ 48,585**
14131155016	13115 c/w Feed Ext 540 Drive			**$ 53,210**
14131155017	13115 c/w Feed Ext 1000 Drive			**$ 53,210**

DOES NOT include: PTO Drive / PTO shaft / Winch / Set-up OR Delivery

IMPORTANT

Above augers include the Extendable Swing (c/w mover), head-end blow-out doors, dual hydraulic lift on grain auger, intake boot, screw jack, hydraulic hoses, heavy duty truss cables & 16" tires/rims.

	PTO DRIVE			
130000013504	540 PTO drive w/ Series 55 Heavy Duty PTO Shaft If choosing reversing option: select **130000013504** & **13000009602** If **NOT** choosing reversing option: select **130000013504** & **13000009603**			**$ 3,070**
13000009602	540 Reverser Option w/ Tensioner			**$ 950**
13000009603	540 Idler			**$ 485**
	OR			
130000013995	1000 PTO Drive Kit c/w 1000 RPM reducing gear box			**$ 5,180**
130000010842	1 3/8 PTO Shaft			**$ 1,590**
130000010843	1 3/4 PTO Shaft			**$ 1,590**
	WINCH			
13000009188	Hand Winch			**$ 490**
13000009446	Hydraulic Winch			**$ 1,720**
	ACCESSORIES			
13000009376	Transport safety kit c/w side marker lights & signals - 75' / 85'			**$ 1,950**
130000014003	Transport safety kit c/w side marker lights & signals - 95'/115'			**$ 2,135**
13000005707	LED Work Light Kit - Augers - 72' / 75'			**$ 590**
13000005709	LED Work Light Kit - Augers - 85'			**$ 590**
13000005710	LED Work Light Kit - Augers - 95'			**$ 590**
13000005712	LED Work Light Kit - Augers - 115'			**$ 590**
13000009593	Poly flex spout 13"			**$ 250**
13000009855	Transport Safety Chains			**$ 145**
130000012105	Right Angle PTO Drive Kit			**$ 3,760**
130000010599	Cable Weight Kit			**$ 235**

see next page for setup and install rates

Factory Setup and Install Prices are NOT discounted.
All prices are FCA Regina, SK; Quoted and Payable in Funds Specified Above.

13" - MRDN Swing Augers - EXTENDABLE SWING

USA Region

Effective Nov 1, 2025

Part #	DESCRIPTION	LBS	KGS	US Funds
	SETUP & INSTALL - NET PRICES			
14900114556	Set-Up MRDN1375			**$ 1,635**
14900114614	Set-Up MRDN1385			**$ 2,010**
14900114758	Set-Up MRDN1395			**$ 2,420**
14900114762	Set-Up MRDN13115			**$ 3,080**
14900114568	Install 540 PTO Drive Kit MRDN 10" & 13"			**$ 315**
14900114572	Install Reverser Kit MRDN 10" & 13"			**$ 55**
14900114594	Install 1000 PTO Kit MRDN 13"			**$ 420**
14900114576	Install Winch MRDN 10" & 13"			**$ 55**
14900114580	Install Transport Safety Kit MRDN 10" & 13"			**$ 105**
13000042705	Install light kit - belt drive or SLMD auger			**$ 115**
14900000088	Pre-delivery inspection (PDI) for SLMD augers			**$ 80**
14900114794	Install Right Angle PTO Drive Kit			**$ 205**
14900114658	Install Cable Weight Kit			**$ 10**

Factory Setup and Install Prices are NOT discounted.
All prices are FCA Regina, SK; Quoted and Payable in Funds Specified Above.

12" - SLMD Swing Augers

USA Region

Effective Nov 1, 2025

Part #	DESCRIPTION	LBS	KGS	US Funds
14001202205	SLMD12-72 Std Meridian Grain Auger - 72.18 ft. (22m)	6037	2738	**$ 24,215**
14001202605	SLMD12-85 Std Meridian Grain Auger - 85.30 ft. (26m)	6525	2960	**$ 25,605**
14001202905	SLMD12-95 Std Meridian Grain Auger - 95.30 ft. (29m)	7173	3254	**$ 27,845**

DOES NOT include: Set-up / Delivery

IMPORTANT

Above augers include 12" mechanical drive swing auger with standard 52"L x 41.5"W x 13"H hopper, hydraulic lift on grain auger, brake winch to raise/lower swing auger, reversible drive, intake boot, screw jack, hydraulic hoses, 540~PTO shaft with shear pin/spline quick disconnect ends, & 16" tires/rims.

	FACTORY SETUP			
14900112022	Set-up SLMD12-72			**$ 1,965**
14900112026	Set-up SLMD12-85			**$ 2,050**
14900112095	Set-up SLMD12-95			**$ 2,210**
	ACCESSORIES			
13000005707	LED Work Light Kit - Augers - 72' / 75'	10	5	**$ 590**
13000005709	LED Work Light Kit - Augers - 85'	10	5	**$ 590**
13000005710	LED Work Light Kit - Augers - 95'	10	5	**$ 590**
13000004924	Kramble 12" - 12V Swing Mover (with 1 remote)	40	18	**$ 3,250**
13000004725	Hydraulic Worm Winch to raise/lower swing	88	40	**$ 1,815**
14800000112	12" Polyethylene telescoping spout, 42" long	10	5	**$ 215**
13000003514	Series 55 EXTREME use 540~PTO shaft - If adding this PTO shaft, add deduction for standard PTO shaft listed below	50	23	**$ 1,345**
13000003330	Weasler CV PTO Shaft 35 Series - SLMD 12	50	23	**$ 1,255**
13000006449	Additional Remote - Key Fob Kramble Mover			**$ 270**
	SETUP & INSTALL - NET PRICES			
13000042705	Install Light kit - Belt Drive or SLMD Auger			**$ 115**
13000042755	Install Hopper Mover for Swing Augers			**$ 200**
13000042760	Install Hydraulic Winch kit on SLMD Auger			**$ 105**
14900000088	Pre-Delivery Inspection (PDI) for SLMD Augers			**$ 80**

Factory Setup and Install Prices are NOT discounted.
All prices are FCA Regina, SK; Quoted and Payable in Funds Specified Above.

14" - SLMD Swing Augers - Standard Hopper

USA Region

Effective Nov 1, 2025

Part #	DESCRIPTION	LBS	KGS		US Funds
14001402901	SLMD14-95 Grain Auger - 96'-4" ft. (29.5m)	11420	5180	**$**	**57,105**
14001403501	SLMD14-115 Grain Auger - 116' 4" ft. (35.5m)	12028	5456	**$**	**59,415**

DOES NOT include: Set-up / Delivery

IMPORTANT

Above augers include 74" x 46" x 12-3/4" swing hopper with Kramble 12V swing mover, hydraulic worm winch for swing, tires & rims, reversible gearbox, patented blow out doors, screw jack, hydraulic hoses, heavy duty truss cables and extendable axles.

	PTO				
13000008571	21 Spline - 1-3/8" PTO Shaft			**$**	**1,770**
13000008572	20 Spline - 1-3/4" PTO Shaft			**$**	**1,770**
	ACCESSORIES				
13000005710	LED Work Light Kit - Augers - 95'	10	5	**$**	**590**
13000005712	LED Work Light Kit - Augers - 115'	10	5	**$**	**590**
13000004968	14" Polyethylene telescoping spout, 42" long - Accommodates models with Blow Out Doors.	19	9	**$**	**265**
	SETUP				
14900114029	Set-up SLMD14-95			**$**	**4,780**
14900114035	Set-up SLMD14-115			**$**	**4,945**
13000042705	Install Light kit - Belt Drive or SLMD Auger			**$**	**115**
14900000088	Pre-Delivery Inspection (PDI) for SLMD Augers			**$**	**80**

Factory Setup and Install Prices are NOT discounted.
All prices are FCA Regina, SK; Quoted and Payable in Funds Specified Above.

14" - SLMD Swing Augers - EXTENDABLE SWING

USA Region

Effective Nov 1, 2025

Part #	DESCRIPTION	LBS	KGS		US Funds
14001402904	SLMD14-95 Meridian Grain Auger - 96'-4" ft. (29.5m)	11420	5180	**$**	**65,865**
14001403504	SLMD14-115 Meridian Grain Auger - 116' 4" ft. (35.5m)	12028	5456	**$**	**70,115**

DOES NOT include: Set-up / Delivery

IMPORTANT

Above augers include the Extendable Swing, hydraulic worm winch for swing, tires & rims, reversible gearbox, patented blow out doors, screw jack, hydraulic hoses, heavy duty truss cables and extendable axles.

	PTO				
13000008571	21 Spline - 1-3/8" PTO Shaft			**$**	**1,770**
13000008572	20 Spline - 1-3/4" PTO Shaft			**$**	**1,770**
	ACCESSORIES				
13000005710	LED Work Light Kit - Augers - 95'	10	5	**$**	**590**
13000005712	LED Work Light Kit - Augers - 115'	10	5	**$**	**590**
13000004968	14" Polyethylene telescoping spout, 42" long - Accommodates models with Blow Out Doors.	19	9	**$**	**265**
	SETUP				
14900114029	Set-up SLMD14-95			**$**	**4,780**
14900114035	Set-up SLMD14-115			**$**	**4,945**
13000042705	Install Light kit - Belt Drive or SLMD Auger			**$**	**115**
14900000088	Pre-Delivery Inspection (PDI) for SLMD Augers			**$**	**80**

Factory Setup and Install Prices are NOT discounted.
All prices are FCA Regina, SK; Quoted and Payable in Funds Specified Above.

CONVEY-ALL®

Truck Load Conveyor Introduction & Overview	2
16” TL (Self-Propelled) Conveyors	4
16” Non-Mover Truck Load Conveyors	5
22” TL (Self-Propelled) Conveyors	6
22” Non-Mover Price Pages	7
12” TED (Non Mover) Conveyors	8
Bin Fill Conveyor Introduction & Overview	9
16” Bin Fill Conveyors	11
22” Bin Fill Conveyors	12
Transfer Conveyor Introduction & Overview	13
16” Transfer Conveyors	14
22” Transfer Conveyors	15
22” Drive Over Conveyors	16

Introduction

Convey-All offers Truck Load Conveyors in various sizes and configurations. The following pages will help you determine the best fit for your customer based on capacity, reach, and available options.

A Truck Load Conveyor is any conveyor offered that's primary use is unloading. These are available in 12", 16", and 22" Chevron belts, as well as various pre-optioned packages.
NOTE: this is not for Convey-All Paddlebelt (TCP) Conveyors.

Step One - Size

Previously marketed as 1200, 1600, and 2200 series conveyors- the first step is determining the right size for your customer.

12"

12'' Belt Conveyors | 12" belt in a 10" tube | Up to 3,500BPH | 35' , 40', & 45' lengths The 12" conveyor is a great entry level or specialty site conveyor.

16"

16'' Belt Conveyors | 16" belt in a 10" tube | Up to 9,000BPH | 35', 45', 50', 58', 75' lengths | The 16" is our standard unload conveyor.

22"

22'' Belt Conveyors | 22" belt in a 14" tube | Up to 12,000BPH | 35', 45', & 52.5' lengths | The 22" is our largest capacity conveyor, most often found on commercial sites or large farms.

Step Two - Basic Configurations

Truck Load Conveyors come in various configurations. These include the following packages:

Field Loader: The Field Loader (FL) is a conveyor that features the **Field Loader Hopper**, the most common open hopper with an s-transition. An FLT is a Field Loader with a Top End Drive. **Field Loaders do not feature a mover kit.** These are like a 'Base' model.

Truck Loader: The Truck Load (TL) package is a self contained conveyor that has a mover kit (Self-Propelled). Both the mover and belt are driven hydraulically. These are the most common unload conveyor configuration. **Most feature the Field Loader Hopper**, or can be ordered with a Rail Car Hopper.

Straight Hopper: This conveyor features a straight hopper with no 'S' Transition. **These are not common for unloading bins or trucks without a transfer conveyor.** This is the 'Bare' model.

Other Model Options

Stainless Steel: Some models are available in full stainless (tube, hopper, discharge) options, listed as SS in the model number. Stainless Ends (Hopper, Discharge) are available as an option on mild-steel units.

Rail Car: Rail Car Hoppers are available on many models, indicated in the model number as RC.

Oilseed Series: A scraper package to help move product such as Canola. Indicated in the Model# as Canola.

Top End Drive: Top End Drive (TED) models are setup for an electric or hydraulic motor on the 'head end' of the conveyor. These feature a Straight Hopper unless they are ordered as an FLT, as described above.

Volt: Battery operated TL Conveyor.

Hopper Styles (Detailed)

Convey-All Truck Load conveyors are available with these hopper configurations.

Straight Hopper
No 'S' Transition.

Field/Truck Load Hopper
The most common hopper

Rail Car Hopper
For use on very low clearance

Step Three - Drive Options

Standard: Select an electric, fuel, PTO, or hydraulic drive system for the belt. Then choose from available options for each style.

Top End Drive: Select available Electric or Hydraulic Motor, or to source your own motor.

Field Loader: Choose PTO drive, Hydraulic Drive, Top End Drive, or Gas Drive.

Truck Loader: Choose available Gas or Diesel Engine, or to source your own engine.

Step 4 - Available Options

Stainless Steel Ends

OilSeed Scrapers

Quad Adjust Hood Package

Electric actuator for discharge hood

Hold down wheels are in place of a s transition hopper- they keep the belt down for fertilizer application

Rail Car Hopper w/ Hold Down Wheels

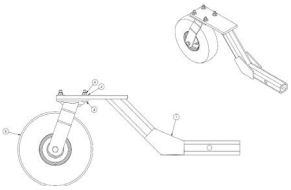

Yard Wheel Caster

CONVEY-ALL®
COUNT ON IT.

16" Truck Loader Conveyors (TL)

US REGION

Effective November 1,2025

1. Select Base Model

ITEM #	Model#	Description	List Prices	Setup
650507760	1640TL	Conveyor 16"X40' FL Hopper Self Propelled Gas Drive	$33,270.00	$3,000.00
650507760S	1640TLSS	Conveyor S/S 16"X40' FL Hopper Self Propelled Gas Drive	$42,670.00	$3,000.00
650506927	1650TL	Conveyor 16"X50' FL Hopper Self Propelled Gas Drive	$33,830.00	$3,000.00
650508439	1650TL-Canola	Conveyor 16"X50' FL Canola Hopper SP Gas Drive	$36,070.00	$3,000.00
650508439S	1650TL-SS-Can	Conveyor 16"X50' FL Canola Hopper SP Gas Drive	$47,880.00	$3,000.00
650506927S	1650TLSS	Conveyor S/S 16"X50' FL Hopper Self Propelled Gas Drive	$45,010.00	$3,000.00
650507383	1650TLRC	Conveyor 16"x50' Rail Car Hopper Self Propelled Gas Drive	$38,630.00	$3,000.00
650507383S	1650TLRCSS	Conveyor S/S 16"x50' Rail Car Hopper Self Propelled Gas Drive	$46,930.00	$3,000.00
Volt1650TL	Volt	Conveyor 16"X50' FL Hopper Battery Powered	$72,390.00	$3,000.00
650507031	1658TL	Conveyor 16"X58' FL Hopper Self Propelled Gas Drive	$34,760.00	$3,000.00
650508440	1658TL-Canola	Conveyor 16"X58' FL Canola Hopper SP Gas Drive	$37,000.00	$3,000.00
650508440S	1658TL-SS-Can	Conveyor 16"X58' FL Hopper Self Propelled Gas Drive	$48,250.00	$3,000.00
650507031S	1658TLSS	Conveyor S/S 16"X58' FL Hopper Self Propelled Gas Drive	$45,380.00	$3,000.00

Motor NOT included, Except for VOLT

STANDARD FEATURES			

Standard Features: 16'' Wide Chevron Belt | 10'' 14GA Tube | "A" Frame Undercarriage | Field Loader Hopper (unless RC is selected) | Adjustable Discharge Hood | Hydraulic Drive | Hydraulic Mover Kit

2. Select Motor

MOTORS	EXCLUSIONS	Description	NET PRICE	Setup
650508087	VOLT1650TL	35HP Kohler Motor includes muffler NET Price	$3,440.00	n/a
650508088	VOLT1650TL	38HP Kohler EFI Motor includes muffler NET price	$4,610.00	n/a
650508089	VOLT1650TL	35HP Vanguard Motor includes muffler NET price	$3,440.00	n/a
650508090	VOLT1650TL	37HP Vanguard EFI Motor includes muffler NET price	$4,610.00	n/a

3. Select Options (available on all models unless indicated otherwise)

OPTIONS	EXCLUSIONS	Description	List Price	Setup
650507319		Light Kit 1650TL	$810.00	$100.00
650507342		Light Kit 1658TL	$810.00	$100.00
650507320		Electric actuator for discharge hood	$250.00	$100.00
13000042071	VOLT1650TL	Cold Weather Pkge 35 Kohler Gas Motor	$136.00	n/a
13000042069	VOLT1650TL	Cold Weather Pkge 35 Vanguard Gas Motor	$136.00	n/a
650508887	SS Base Models	stainless steel Ends (in lieu of mild steel)	$2,830.00	n/a
650509465	SS Base Models	stainless steel Ends (in lieu of mild steel)	$2,830.00	n/a
1865000002		Oil Tank Heater	$380.00	n/a
1865000001	VOLT1650TL	125 Watt Heater for 35 HP Kohler	$330.00	n/a
1865000007	VOLT1650TL	Vanguard oil heater	$0.00	n/a
503418	Non RC models	RC Hopper w/ Hold down wheels, 1/4" material	$3,860.00	n/a
504386		Fender & Light Pkg	$2,270.00	n/a
402246		2 5/16 " Ball Receiver Hitch	$400.00	n/a
503326		Quad Adjust Hood Pkge	$2,050.00	n/a

CONVEY-ALL®
COUNT ON IT.

16" Field Loader Conveyors (FL)

US REGION

Effective November 1, 2025

1. Select Base Model

ITEM #	Model#	Description	List Prices	Setup
650507755	**1635FLT**	Conveyor 16"X35' FL Hopper Top Drive Elec. motor not incl.	$16,050.00	$1,000.00
650507759	**1645FLT**	Conveyor 16"X45' FL Hopper Top Drive Elec. Motor not Incl.	$17,320.00	$1,000.00
650508318	**1635FL**	1635 Field Loader Hopper Select drive below	$17,000.00	$1,000.00
650508621	**1645FL**	1645 Field Loader Hopper select drive below	$18,270.00	$1,000.00
650510369	**1635RC**	1635 Rail Car Hopper Select drive below	$18,410.00	$1,000.00
650510374	**1645RC**	1645 Rail Car Hopper Select drive below	$19,680.00	$1,000.00
650507777	**1635**	Conveyor 16"X35' Straight Hopper S-Drive Motor Not Incl.	$15,380.00	$1,050.00
650507779	**1645**	Conveyor 16"X45' Straight Hopper S-Drive Motor Not Incl.	$16,150.00	$1,050.00

Motor NOT INCLUDED in base price

STANDARD FEATURES			

Standard Features: 16'' Wide Chevron Belt | 10'' 14GA Tube | "A" Frame Undercarriage | Adjustable Discharge Hood

2. Select Drive

Drive Options	Models	Description	List Prices	Setup
650508326	FL | FLT | RC	S-Drive Gas	$4,180.00	$0.00
650508323	FL | FLT | RC	S-Drive Electric	$2,820.00	$0.00
650507027	FL | FLT | RC	S-Drive Side PTO	$740.00	$0.00
650508344	FL | FLT | RC	S-Drive Hydraulic	$1,090.00	$0.00
503519	BASE | TED	Gas Drive (c/w Pulleys, belts & guards) No Motor, 35'	$3,630.00	$350.00
503527	BASE | TED	Gas Drive (c/w Pulleys, belts & guards) No Motor, 45'	$3,740.00	$325.00
503332	BASE | TED	Electric Drive (c/w Pulleys, belts & guards) No Motor	$2,460.00	$50.00
503530	BASE | TED	Side PTO Drive	$1,290.00	$85.00
504191	BASE | TED	Hydraulic Drive (c/w motor)	$3,170.00	$275.00

2. Select Motor (Unless PTO or Hydraulic is selected)

MOTORS	Models	Description	List Prices	Setup
1920000067	FL | FLT | RC	23.5 HP Kohler Motor	$4,120.00	n/a
1910000034	FL | FLT | RC	15 HP 3 Phase Motor 1800 RPM (230/460 volt)	$1,650.00	n/a
1910000036	FL | FLT | RC	15 HP 3 Phase Motor 1800 RPM (575 volt)	$1,650.00	n/a
1910000030	FL | FLT | RC	10 HP 1 Phase Motor 1800 RPM	$2,100.00	n/a

3. Selet Options (available on all models unless otherwise specified)

OPTIONS		Description	List Prices	Setup
650508887	FL	stainless steel Ends (in lieu of mild steel)	$2,830.00	n/a
504357		Yard Wheel Caster	$280.00	n/a
13000042055		Electric Clutch, Gas Dr. 1 1/8 " 3 Groove	$1,170.00	n/a
402246		2 5/16 " Ball Receiver Hitch	$400.00	n/a
650507319		Light Kit 1650TL	$810.00	$100.00

CONVEY-ALL®
COUNT ON IT.

22" Truck Loader Conveyors (TL)

US REGION

Effective November 1, 2025

1. Select Base Model

ITEM #	Model#	Description	List Prices	Setup
650507761	2250TL	Conveyor 22"X50' FL Canola Hopper Self Propelled Diesel Drive	$69,880.00	$3,000.00
650510107	2250TL-Canola	Conveyor 22"X50' FL Hopper Self Propelled Diesel Drive	$72,200.00	$3,000.00
650507761S	2250TLSS	Conveyor S/S 22"X50' FL Hopper Self Propelled Diesel Drive	$76,180.00	$3,000.00
650508508	2250TLRC	Conveyor 22"X50' RC Hopper Self Propelled Diesel Drive Rail Car	$73,670.00	$3,000.00
650508508S	2250TLRCSS	Conveyor S/S 22"X50' RC Hopper Self Propelled Diesel Drive Rail Car	$79,870.00	$3,000.00
650507766	2258TL	Conveyor 22"X58' FL Hopper Self Propelled Diesel Drive	$73,260.00	$3,000.00
650510108	2258TL-Canola	Conveyor 22"X58' FL Canola Hopper Self Propelled Diesel Drive	$75,580.00	$3,000.00
650507766S	2258TLSS	Conveyor S/S 22"X58' FL Hopper Self Propelled Diesel Drive	$80,970.00	$3,000.00
650508516	2258TLRC	Conveyor 22"X58' RC Hopper Self Propelled Diesel Drive Rail Car	$77,060.00	$3,000.00
650508517	2258TLRCSS	Conveyor S/S 22"X58' RC Hopper Self Propelled Diesel Drive Rail Car	$84,660.00	$3,000.00

Motor IS Included in base price

STANDARD FEATURES			

Standard Features: 22'' Wide Chevron Belt | 14'' 12GA Tube | "A" Frame Undercarriage | Field Loader Hopper (unless RC is selected) | Adjustable Discharge Hood | Hydraulic Drive | 50HP Kubota Tier 4 Diesel Motor | Hydraulic Mover Kit | 1/4" Hopper Construction | 27 x 10.50 x 15 - 6 Ply Steering Tire

2. Select Options

OPTIONS	Exclusions	Description	List Prices	Setup
650511156		Light Kit with Extension Wire	$810.00	$100.00
650507320		Electric actuator for discharge hood	$250.00	$100.00
1865000006		500 Watt Oil Tank Heater	$360.00	n/a
650509543	SS Base Models	stainless steel Ends (in lieu of mild steel) 22" TL	$2,920.00	n/a

CONVEY-ALL®
COUNT ON IT.

22" Conveyors 35'-50' (No Mover)

US REGION
Effective November 1, 2025

1. Select Base Model

ITEM #	Model#	Description	List Prices	Setup
2235	2235	Conveyor 22"X35' A-Frame Positive Pinch Drive	$21,280.00	$1,300.00
650507790	2245	Conveyor 22"X45' A-Frame Positive Pinch Drive	$24,750.00	$1,350.00

Motor NOT Included in base

STANDARD FEATURES			

Standard Features: 14” x 12 Gauge Tubes. (304 on SS) | 22” Wide Rubber Belt | Spring Tension Standard “S” Drive Box

2. Select Drive

DRIVE OPTIONS		Description	List Prices	Setup
503039		Electric Drive (c/w Pulleys, belts & guards) No Motor 45' & Lower	$3,240.00	$450.00
503731		Hydraulic Drive (c/w motor) 45' & Lower	$1,610.00	$190.00
503463		Gas Drive Pkg Requires 35 HP Kohler, 45' & Lower	$5,330.00	$550.00
650508244		Side Pto Drive Kit	$1,540.00	n/a

2. Select Motor (Unless PTO or Hydraulic is selected)

MOTORS	Length	Description	List Prices	Setup
1910000034	2235 - 2255	15 HP 3 Phase Motor 1800 RPM (230/460 volt)	$1,650.00	n/a
1910000036	2235 - 2255	15 HP 3 Phase Motor 1800 RPM (575 volt)	$1,650.00	n/a
650508087		35HP Kohler Motor includes muffler NET Price	$3,440.00	n/a

3. Select Options (Available on all models unless indicated otherwsie)

OPTIONS		Description	List Prices	Setup
504357		Yard Wheel Caster	$280.00	n/a
503638		Winch Kit for Collapsible Hopper (Main Conveyor)	$370.00	n/a
503132		Hyd. Clevis Hitch	$1,420.00	n/a
650505114		Wet Kit (Includes Motor) 55' - 110'	$4,610.00	n/a
650509509		stainless steel Ends (in lieu of mild steel) 22" Bin fill	$3,160.00	n/a

CONVEY-ALL®
COUNT ON IT.

12" Top End Drive Conveyors (TED)

US REGION

Effective November 1, 2025

1.Select Base Model

ITEM #	Model#	Description	List Prices	Setup
650507751	1235 TED	Conveyor 12"X35' Straight Hopper Top Drive	$10,460.00	$700.00
650507753	1240 TED	Conveyor 12"X40' Straight Hopper Top Drive	$10,840.00	$700.00

Motor NOT Included in base

STANDARD FEATURES			

Standard Features: 12'' Wide Chevron Belt | 10'' 14GA Tube | "A" Frame Undercarriage | Adjustable Discharge Hood

2. Select Drive

DRIVE OPTIONS (Select one)		Description	List Prices	Setup
503238		Electric Direct Drive kit 700 FPM	$1,280.00	$110.00
503602		Electric Drive with Speed Reduction kit	$1,710.00	$110.00
501199		Hydraulic Drive (c/w motor)	$1,080.00	$85.00

3. Select Motor (uness Hydraulic is selected)

MOTORS		Description	List Prices	Setup
1910000016		5 HP Single Phase Motor	$1,280.00	n/a
1910000017		5 HP 3 Phase Motor (230/460 volt)	$790.00	n/a
1910000020		5 HP 3 Phase Motor (575 volt)	$790.00	n/a

3. Select Options

OPTIONS			List Prices	Setup
504395		Wind guard for 1235	$820.00	$110.00
504337		Wind guard for 1240	$920.00	$140.00
504396		Wind Guard and Drip Pan Package 1235	$1,110.00	$265.00
504338		Wind Guard and Drip Pan Package 1240	$1,280.00	$275.00
TC10005743		Brush Kit at drive roller	$1,810.00	$85.00
TC1000RLH		Rubber Lined Hood	$430.00	n/a
504357		Yard Wheel Caster	$280.00	n/a
402246		2 5/16 " Ball Receiver Hitch	$400.00	n/a

Introduction

Convey-All offers Bin Fill Conveyors in various sizes and configurations. The following pages will help you determine the best fit for your customer based on capacity, reach, and available options.

A Bin Fill Conveyor is any conveyor offered that's primary use is loading. These are available in 16" and 22" Chevron belts, as well as various pre-optioned packages.

Step One - Size

Previously marketed as 1600, and 2200 series conveyors- the first step is determining the right size for your customer.

16"

16'' Belt Conveyors | 16" belt in a 10" tube | Up to 9,000BPH | up to 100' lengths |The 16" is the most common Bin Fill Conveyor.

22"

22'' Belt Conveyors | 22" belt in a 14" tube | Up to 12,000BPH | up 120' lengths | The 22" is our largest capacity conveyor, most often found on commercial sites or large farms.

Step Two - Drive Options

Select an electric, PTO, diesel, or hydraulic drive system for the belt. Then choose from available options for each style.

Step 3 - Available Options

Bin Fill Conveyors come with various configurations.

Straight Hopper: This conveyor features a straight hopper with no 'S' Transition. **These are typically paired with a transfer conveyor, found on pages 13-16.** Select an electric, diesel, PTO, or hydraulic drive system for the belt.

Swing-Out (SO) Package: Swing-out conveyors have a swing-out hopper made to reach under trucks. These are available with a hydraulic or electric mover.

Self-Propel (SP): The SP Packages are made to be completely self-contained and self-driven. These mover and drive packages are available on most models.

Stainless Steel: Some models are available in full stainless (tube, hopper, discharge). Inquire within for a quote. Stainless Ends (Hopper, Discharge) are available as an option on mild-steel units.

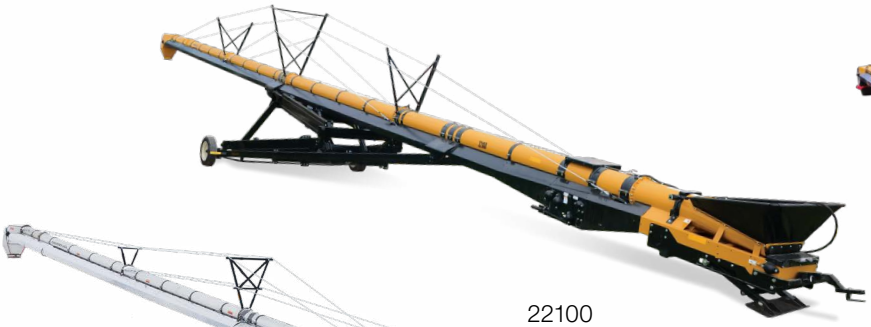

22100

1690 WITH SWING OUT

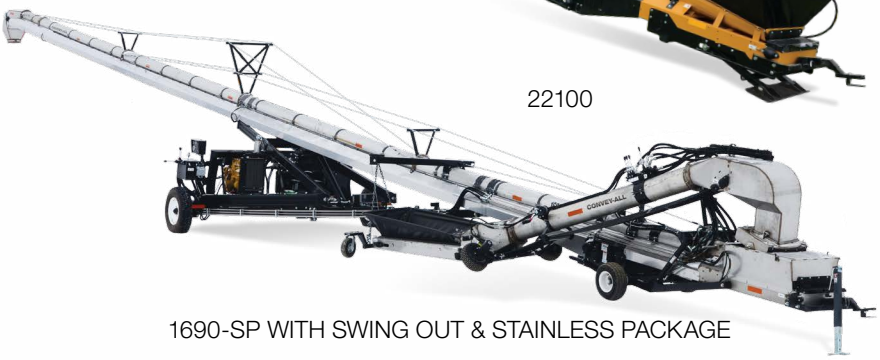

1690-SP WITH SWING OUT & STAINLESS PACKAGE

Hopper Styles

Convey-All Bin Fill conveyors are available with these hopper configurations.

Straight Hopper
No ‘S’ Transition.

Swing Out Package

Step 4 - Available Options

Self-Propel (SP) Kit

Wet Kit- used to raise and lower the conveyor if customer is wanting to run a unit on electric and doesn’t have a tractor for the hydraulics to raise the conveyor

Stainless Steel Ends

Swing-Out with Hydraulic Mover

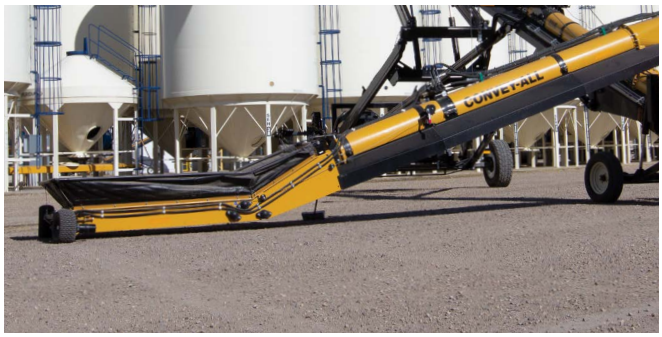

Swing-Out with Electric Mover

CONVEY-ALL®
COUNT ON IT.

16" Bin Fill Conveyors (55-100)

US REGION
Effective November 1, 2025

1. Select Model

ITEM #	Model#	Description	List Prices	Setup
650507748	**1655**	Conveyor 16"X55' Scissor Lift Positive Pinch Drive	$26,050.00	$1,300.00
650507749	**1665**	Conveyor 16"X65' Scissor Lift Positive Pinch Drive	$27,350.00	$1,500.00
650507750	**1670**	Conveyor 16"X70' Scissor Lift Positive Pinch Drive	$28,490.00	$1,800.00
650507752	**1675**	Conveyor 16"X75' Scissor Lift Positive Pinch Drive	$29,180.00	$2,000.00
650507763	**1685**	Conveyor 16"X85' Scissor Lift Positive Pinch Drive	$32,050.00	$2,100.00
650507764	**1690**	Conveyor 16"X90' Scissor Lift Positive Pinch Drive	$33,450.00	$2,300.00
650507765	**16100**	Conveyor 16"X100' Scissor Lift Positive Pinch Drive No SP	$43,250.00	$2,700.00
650511163	**1665SP2**	Conveyor 16"X65'SP Gas Drive (38HP Req Not Inc.) FL Hopper	$44,860.00	$2,300.00
650511164	**1675SP2**	Conveyor 16"X75'SP Gas Drive (38HP Req Not Inc.) FL Hopper	$47,060.00	$2,400.00
650511165	**1685SP2**	Conveyor 16"X85'SP Gas Drive (38HP Req Not Inc.) FL Hopper	$48,670.00	$2,500.00
650510785	**1690-Oilseed**	Conveyor 16"X90' Scissor Lift Positive Pinch Drive - Oilseed	$36,410.00	$2,300.00
650510786	**16100-Oilseed**	Conveyor 16"X100' Scissor Lift Positive Pinch Drive - Oilseed	$46,210.00	$2,700.00

Standard Features: 10” 12 & 14 Gauge Tubes | 16” Wide Rubber Belt | Hydraulic Scissor Lift | Adjustable Discharge Hood | Straight Hopper

2. Select Drive

DRIVE OPTIONS (Select one)		Description	List Prices	Setup
503080		Electric Drive (c/w Pulleys, belts & guards) No Motor, 55' - 100'	$2,870.00	$275.00
504298		End PTO Drive (shear pin protection), All Models	$2,870.00	$250.00
650508014		Diesel Drive w/ Mover no swing	$55,770.00	$1,250.00
503508		Side PTO Drive (shear pin protection), All Models	$1,390.00	$110.00

3. Select Motor (if Electric Drive)

MOTORS	Length	Description	List Prices	Setup
1910000034	1655 - 1665	15 HP 3 Phase Motor 1800 RPM (230/460 volt)	$1,650.00	n/a
1910000036	1655 - 1655	15 HP 3 Phase Motor 1800 RPM (575 volt)	$1,650.00	n/a
1910000043	1670 - 16100	20 HP, 3 Phase Motor 1800 RPM (230/460 Volt), 70' - 100'	$2,010.00	n/a
1910000042	1670 - 16100	20 HP, 3 Phase Motor 1800 RPM (575 Volt), 70' - 100'	$2,010.00	n/a

4. Select Options (Available on all models unless indicated otherwise)

OPTIONS	Exclusions	Description	List Prices	Setup
650507203		Swing out W/ Elec Mover kit, 75'- 100' Includes end PTO and winch	$17,330.00	$800.00
650505047		Swing Out W/ Hyd. Mover Kit, 85' - 100' Includes end PTO and winch	$17,680.00	$800.00
650508031	1655, 1665, 16100	SP Pkg W/ 50 HP Kubota Tier 4 & hyd Swing Out includes winch	$67,250.00	$1,700.00
650509557	1655, 1665, 16100	SP Pkg W/ 50 HP Kubota Tier 4 & Elec Swing Out includes winch	$66,550.00	$1,700.00
650509582		stainless steel Ends (in lieu of mild steel) 16" Bin fill	$3,000.00	n/a
503816		Hydraulic 90 Degree Hopper Axle	$1,740.00	$100.00
650508267		Electric Drive Swingout Conveyor with Electric hopper mover NO PTO Incl. Winch	$19,290.00	$800.00
504354		Wet Kit (Includes Electric Motor)	$4,610.00	$450.00

CONVEY-ALL®
COUNT ON IT.

22" Bin Fill Conveyors (85-120)

US REGION
Effective November 1, 2025

1. Select Base Model

ITEM #	Model#	Description	List Prices	Setup
650507791	**2265**	Conveyor 22"X65' Scissor Lift Positive Pinch Drive	$33,830.00	$1,700.00
650507792	**2275**	Conveyor 22"X75' Scissor Lift Positive Pinch Drive	$44,280.00	$2,300.00
650507793	**2285**	Conveyor 22"X85' Scissor Lift Positive Pinch Drive	$47,090.00	$2,400.00
650507794	**2290**	Conveyor 22"X90' Scissor Lift Positive Pinch Drive	$48,510.00	$2,500.00
650507795	**22100**	Conveyor 22"X100' Scissor Lift Positive Pinch Drive	$51,690.00	$3,100.00
650507796	**22110**	Conveyor 22"X110' Scissor Lift Positive Pinch Drive	$62,780.00	$3,200.00
650507797	**22120**	Conveyor 22"X120' Scissor Lift Positive Pinch Drive	$72,420.00	$3,900.00

Motor NOT included in base

STANDARD FEATURES

Standard Features: 14” x 12 Gauge Tubes. (304 on SS) | 22” Wide Rubber Belt | Positive Non-Slip Drive

2. Select Drive

DRIVE OPTIONS (Select 1)		Description	List Prices	Setup
503054	2285 - 22120	Electric Drive kit, 65+	$2,330.00	$400.00
503542		Electric Drive kit (c/w belts, pulleys, guards)	$3,450.00	$475.00
650508244		Side Pto Drive Kit	$1,540.00	n/a
650508483	2285 - 22110	Diesel Drive w/ Mover no swing 80HP Cummins Diesel	$57,860.00	$1,750.00
504212		End PTO Drive (c/w shear bolt protection), 65+	$3,210.00	$275.00
650505004		120' End PTO Drive (c/w Shear Bolt Mechanism)	$3,630.00	$275.00

3. Select Motor (if Electric Drive is selected)

MOTORS	Model	Description	List Prices	Setup
1910000060	2265	25 HP 1200 RPM (575 volt), 65'	$4,190.00	n/a
1910000059	2265	25 HP 1200 RPM (230/460 volt),65'	$4,190.00	n/a
1910000046	2270 - 2275	30 HP, 1200 RPM (575 Volt), 70' - 75'	$4,610.00	n/a
1910000061	2270 - 2275	30 HP, 1200 RPM (230/460 Volt), 70' - 75'	$4,610.00	n/a
1910000047	2285 - 22110	40 HP 1200 RPM (575 volt)	$7,070.00	n/a
1910000048	2285 - 22110	40HP 1200 RPM (230/460 volt)	$7,070.00	n/a
1910000064	22120	50 HP 1200 RPM (575 volt) All Models	$8,130.00	n/a

4. Select Options (Available on all models unless indicated otherwise)

OPTIONS	Exclusions	Description	List Prices	Setup
650507475	2265-2275	Swing Out W / 12 Volt Mover & Winch Includes Hyd. Hitch	$15,380.00	$750.00
650507439	2265-2275	Swing Out with hyd mover and winch Includes Hyd. Hitch	$15,300.00	$0.00
650510711	2265-2276	Mover Undercarriage w'electric - Swing out kit	$73,240.00	$2,500.00
650508484	2265-2277	Mover Undercarriage w'hydraulic - Swing out kit	$73,160.00	$2,500.00
503638		Winch Kit for Collapsible Hopper (Main Conveyor)	$370.00	n/a
503451	2265-22110	Hyd. Pintle Hitch 120' For Non Swing units	$1,810.00	n/a
503132		Hyd. Clevis Hitch	$1,420.00	n/a
503526	2265-2275	Hyd. Winch for Swing Out /Non SP Units	$1,080.00	$100.00
503491	2265-2275	HD Rail Rim 2 Req'd	$640.00	n/a
650505114		Wet Kit (Includes Motor) 55' - 110'	$4,610.00	n/a
503816	2265-2275	Hydraulic 90 Degree Hopper Axle	$1,740.00	$100.00
650509509		stainless steel Ends (in lieu of mild steel) 22" Bin fill	$3,160.00	n/a

Introduction

Convey-All offers Transfer Conveyors in various sizes and configurations. The following pages will help you determine the best fit for your customer based on capacity, reach, and available options.

A Transfer Conveyor is a conveyor that is typically paired another conveyor to complete a loading or unloading task. These are most often paired with Convey-All's straight hopper units.

Step One - Size

Previously marketed as 1600, and 2200 series conveyors- the first step is determining the right size for your customer.

16"

16'' Belt Conveyors | 16" belt in a 10" tube | Up to 9,000BPH | This is our most common size transfer conveyor.

22"

22'' Belt Conveyors | 22" belt in a 14" tube | Up to 12,000BPH | The 22" is our largest capacity conveyor, most often found on commercial sites or large farms.

Step Two - Configuration

There are three different styles of Transfer Conveyor currently offered

Field Loader Hopper

Rail Car Hopper

Drive Over Hopper

These units are available in a full Stainless Steel Package.

Step 3 - Drive Options

Select an electric, gas, or hydraulic drive system for the belt. Then choose from available options for each style.

1616-RC Railcar

1616

2228-DO Drive-Over

CONVEY-ALL®
COUNT ON IT.

16" Transfer Conveyors (TC)

US REGION
Effective November 1, 2025

1. Select Base Model

ITEM #	Model#	Description	List Prices	Setup
650507781	1615	Transfer Conveyor 16"X15' FL Hopper	$7,790.00	n/a
650507781S	1615SS	Transfer Conveyor S/S 16"X15' FL Hopper	$9,480.00	n/a
650507783	1616RC	Transfer Conveyor 16"X16' Rail Car Hopper	$9,630.00	n/a
650507783S	1616RCSS	Transfer Conveyor S/S 16"X16' Rail Car Hopper	$12,200.00	n/a

Motor NOT included in base

STANDARD FEATURES			

Standard Features: 10” x 14 Gauge Tubes | 16” Wide Chevron Rubber Belt | Winch Down Collapsible Hopper (FL) Winch UP Hopper Flaps (RC)

2. Select Drive

DRIVE OPTIONS (Select one)		Description	List Prices	Setup
503243		Countershaft Gas Drive (reqd for 13 HP - motor not included)	$2,870.00	n/a
501258		Gas Drive (c/w Pulleys, belts & guards) No Motor	$1,400.00	n/a
501253		Elec. Drive (c/w Pulleys, belts & guards) No Motor	$1,810.00	n/a
503670		Hydraulic Drive (c/w motor) No Hyd. Hoses	$1,080.00	n/a

3. Select Motor (unless Hydraulic Drive is selected)

MOTORS		Description	List Prices	Setup
1920000006		11 HP Honda W/ 6.1 Reduction	$1,760.00	n/a
1920000010		13 HP Honda Electric Start	$1,900.00	n/a
1910000051		7.5 HP 3PH Motor 230/460 volt	$1,030.00	n/a
1910000027		7.5 HP 3PH Motor 575 volt	$1,030.00	n/a
1910000023		7.5 HP 1PH Motor	$1,780.00	n/a

Select Options (available on all models unless indicated otherwise)

OPTIONS		Description	List Prices	Setup
504314		Wind guard, Drip Pan Pkg	$450.00	n/a
503608		Hopper Casters	$500.00	n/a
504357		Yard Wheel Caster	$280.00	n/a
402246		2 5/16 " Ball Receiver Hitch	$400.00	n/a
650506854		Swivel Discharge (For swiveling on a leg intake hopper)	$500.00	n/a
1920000065		Cent. Clutch For 13 HP Honda	$500.00	n/a

CONVEY-ALL®
COUNT ON IT.

22" Transfer Conveyors (TC)

US REGION
Effective November 1, 2025

1. Select Base Model

ITEM #	Model#	Description	List Prices	Setup
650507785	2218	Transfer Conveyor 22"X18' FL Hopper	$10,160.00	n/a
650507787	2218RC	Transfer Conveyor 22"X18' Rail Car Hopper	$13,440.00	n/a
650507787S	2218RCSS	Transfer Conveyor S/S 22"X18' Rail Car Hopper	$15,680.00	n/a

Motor NOT included in base

STANDARD FEATURES			

Standard Features: 14” x 12 Gauge Tubes | Winch UP Containment Flaps | Field Loader Hopper (FL)
Rail Car Hopper (RC)

2. Select Drive

DRIVE OPTIONS		Description	List Prices	Setup
650505007		Elec. Drive (c/w Motor mount, jack shaft, mounts, guards belts, pulleys)	$2,380.00	#N/A
503239		Countershaft Gas Drive (reqd for 13 HP - motor not included)	$3,330.00	n/a
503671		Gas Drive (c/w Pulleys, belts & guards) No Motor	$1,520.00	n/a

3. Select Motor (unless Hydraulic Drive is selected)

MOTORS		Description	List Prices	Setup
1920000006		11 HP Honda W/ 6.1 Reduction	$1,760.00	n/a
1920000010		13 HP Honda Electric Start	$1,900.00	n/a
1910000029		10 HP 3PH Motor 230/460 volt	$1,180.00	n/a
1910000033		10 HP 3PH Motor 575 volt	$1,180.00	n/a
1910000030		10 HP 1 Phase Motor 1800 RPM	$2,100.00	n/a

4. Select Options (Available on all models unless indicated otherwise)

OPTIONS		Description	List Prices	Setup
503608	2218	Hopper Casters	$500.00	n/a
402246	2218	2 5/16 " Ball Receiver Hitch	$400.00	n/a
504357	2218	Yard Wheel Caster	$280.00	n/a
650505020	2218	Swivel Discharge for leg	$520.00	n/a
1920000065	2218	Cent. Clutch For 13 HP Honda	$500.00	n/a

CONVEY-ALL®
COUNT ON IT.

22" Drive Over Conveyors (DO)

US REGION
Effective November 1, 2025

1. Select Base

ITEM #	Model#	Description	List Prices	Setup
650507676	2228	Drive over Conveyor 22"X28' 5 1/4" Deck Height	$23,690.00	n/a
650507676S	2228SS	Drive over Conveyor S/S 22"X28' 5 1/4" Deck Height	$25,800.00	n/a

Motor NOT included in base. SS Package includes stainless discharge and tube, NOT hopper.

STANDARD FEATURES			

Hydraulic Cylinder Lift on Undercarriage | Standard Discharge Height 35” | Approx. 3980 LBS 5 1/4” Drive Over Clearance

2. Select Drive

DRIVE OPTIONS		Description	List Prices	Setup
650509466		Hydraulic Drive (c/w Motor, Manual Hydraulic Valve)	$2,190.00	n/a
650505007		Elec. Drive (c/w Motor mount, jack shaft, mounts, guards belts, pulleys)	$2,380.00	n/a
650505021		Gas Drive (Less Motor)	$5,140.00	n/a

3. Select Motor (unless Hyraulic Drive is selected)

MOTORS		Description	NET PRICE	Setup
650508087		35HP Kohler Motor includes muffler NET Price	$3,440.00	n/a
650508088		38HP Kohler EFI Motor includes muffler NET price	$4,610.00	n/a
650508089		35HP Vanguard Motor includes muffler NET price	$3,440.00	n/a
650508090		37HP Vanguard EFI Motor includes muffler NET price	$4,610.00	n/a
1910000034		15 HP 3 Phase Motor 1800 RPM (230/460 volt)	$1,650.00	n/a
1910000036		15 HP 3 Phase Motor 1800 RPM (575 volt)	$1,650.00	n/a

OPTIONS		Description	List Prices	Setup
650507745		Mover Kit Motor NOT Included	$14,860.00	$800.00
1830000109		Wet Kit (c/w hyd pump, valve, mounts, hoses, fittings, (110 VOLT)	$2,380.00	$275.00
1830000110		Wet Kit (c/w hyd pump, valve, mounts, hoses, fittings, (220 VOLT)	$2,380.00	$275.00

CONVEY-ALL®
COUNT ON IT.

16" Paddle Belt Conveyors (TCP)

US REGION

Effective November 1, 2025

1. Select Model

ITEM #	Model#	Description	List Prices	Setup
650507767	TCP 1620	Conveyor 16"X20' Paddle Belt Top Drive 5HP motor not incl.	$13,010.00	$900.00
650507798	TCP 1620S	Conveyor 16"X20' Stand Paddle Belt Top Drive 5HP motor not incl.	$9,920.00	n/a
650507768	TCP 1625	Conveyor 16"X25' Paddle Belt Top Drive 5HP motor not incl.	$14,750.00	$900.00
650507827	TCP 1625S	Conveyor 16"X25' Stand Paddle Belt Top Drive 5HP motor not incl.	$11,780.00	n/a
650507769	TCP 1630	Conveyor 16"X30' Paddle Belt Top Drive 7.5HP motor not incl.	$15,710.00	$900.00
650507893	TCP 1630S	Conveyor 16"X30' Stand Paddle Belt Top Drive 7.5HP motor not incl.	$13,660.00	n/a
650507770	TCP 1635	Conveyor 16"X35' Paddle Belt Top Drive 7.5HP motor not incl.	$16,870.00	$900.00
650507799	TCP 1635S	Conveyor 16"X35' Stand Paddle Belt Top Drive 7.5HP motor not incl.	$15,550.00	n/a
650507814	TCP 1640	Conveyor 16"X40' Paddle Belt Top Drive 10HP motor not incl.	$18,270.00	$900.00
650507800	TCP 1640S	Conveyor 16"X40' Stand Paddle Belt Top Drive 10HP motor not incl.	$16,510.00	n/a
650507816	TCP 1645	Conveyor 16"X45' Paddle Belt Top Drive 10HP motor not incl.	$19,140.00	$1,050.00

MOTOR NOT INCLUDED

STANDARD FEATURES			

10" x 14 Gauge Tubes | 16" Paddle Belt | Top End Drive Electric w/ Countershaft | Steel Hopper W/ Clean Out

2. Select Motor

MOTORS	Conveyor	Description	List Prices	Setup
1910000016	1620 - 1625	5 HP Single Phase Motor	$1,280.00	n/a
1910000017	1620 - 1625	5 HP 3 Phase Motor (230/460 volt)	$790.00	n/a
1910000020	1620 - 1625	5 HP 3 Phase Motor (575 volt)	$790.00	n/a
1910000023	1630 -1635	7.5 HP 1PH Motor	$1,780.00	n/a
1910000051	1630 - 1635	7.5 HP 3PH Motor 230/460 volt	$1,030.00	n/a
1910000027	1630 - 1635	7.5 HP 3PH Motor 575 volt	$1,030.00	n/a
1910000030	1640 - 1645	10 HP 1 Phase Motor 1800 RPM	$2,100.00	n/a
1910000029	1640 - 1645	10 HP 3PH Motor 230/460 volt	$1,180.00	n/a
1910000033	1640 - 1645	10 HP 3PH Motor 575 volt	$1,180.00	n/a

3. Select Options

OPTIONS		Description	List Prices	Setup
504356		Steel Hopper Cover	$270.00	n/a
504157		Collapsible Hopper Option in Lieu of Steel hopper	$830.00	n/a
TCP1600C		10' Base Unit	$5,330.00	n/a
TCP160CF		Price Per Linear Foot	$370.00	n/a
501346		90" A Frame Stand < 15'	$920.00	n/a
501347		126" A Frame Stand < 20'	$980.00	n/a
501348		162" A Frame Stand <25'	$1,030.00	n/a
503026		198" A Frame Stand <30'	$1,100.00	n/a
503027		234" A Frame Stand <35'	$1,180.00	n/a

CONVEY-ALL®
COUNT ON IT.

18" OPEN BED LOW PROFILE CONVEYORS (OBL)

US REGION
Effective November 1, 2025

BED SECTIONS		Description	List Prices	Setup
504366		18" Open bed low profile bed kit - 2'	$640.00	n/a
504365		18" Open bed low profile bed kit - 4'	$890.00	n/a
504364		18" Open bed low profile bed kit - 6'	$1,030.00	n/a
504363		18" Open bed low profile bed kit - 8'	$1,190.00	n/a
504362		18" Open bed low profile bed kit - 10'	$1,430.00	n/a
504377		18" Open Bed Low profile Tail Section 10'	$1,570.00	n/a
1003050004	Per foot	Chevron Rubber Belting 18" Ultimate I 2-PLY 150 WGT	$30.00	n/a

For belting Multiply Conveyor Length X 2 add 5' for end drive 7' for In-Line drive.

DISCHARGE SPOUT OPTIONS		Description	List Prices	Setup
504408		Low profile discharge spout - 10"	$320.00	n/a
504409		Low profile discharge spout	$280.00	n/a
504410		60 Degree Low profile discharge spout w/ 10" flange	$380.00	n/a

DRIVE OPTIONS		Description	List Prices	Setup
504401		Electric drive up to 40'	$4,650.00	n/a
650505066		Electric drive with gearbox up to 40'	$3,910.00	n/a
504361		Electric drive 40' - 90'	$4,650.00	n/a
650505063		Electric drive with gearbox 40' - 90'	$3,910.00	n/a
504359		Electric drive 90' and up	$4,650.00	n/a
650508915		In-line reversible drive for 18" OBL Includes end rollers. Discharge not included	$7,520.00	n/a
650505070		Electric drive with gearbox 90' and up	$3,910.00	n/a

Electric motors on page 18

OPTIONS		Description	List Prices	Setup
504389		OBL-18 Meridian bin transition	$250.00	n/a
37511		Standard Airgate Transition For standard 18" Meridian Gate	$1,140.00	n/a
650510600		High Capacity Airgate Transition For standard 18" Meridian Gate	$1,250.00	n/a
503145		Discharge stand	$530.00	n/a

~ 18" Wide Belt
~ 2,900 Bushel per hour at 400 FPM
~ Open bed with rollers mild steel
~ Stainless Steel available

CONVEY-ALL®
COUNT ON IT.

24" OPEN BED LOW PROFILE CONVEYORS (OBL)

US REGION

Effective November 1, 2025

BED SECTIONS		Description	List Prices	Setup
504371		24" Open bed low profile bed kit - 2'	$590.00	n/a
504370		24" Open bed low profile bed kit - 4'	$960.00	n/a
504369		24" Open bed low profile bed kit - 6'	$1,120.00	n/a
504368		24" Open bed low profile bed kit - 8'	$1,330.00	n/a
504367		24" Open bed low profile bed kit - 10'	$1,680.00	n/a
504379		24" Open Bed Low profile Tail Section 10'	$1,680.00	n/a
1005100001	Per Foot	Chevron Rubber Belting 24" 2 ply x Bare MOR	$22.00	n/a

For belting Multiply Conveyor Length X 2 add 5' for end drive 7' for In-Line drive.

DISCHARGE SPOUT OPTIONS		Description	List Prices	Setup
504424		Low profile horizontal discharge spout	$190.00	n/a
504423		Low profile 14" flanged discharge spout	$310.00	n/a
650505351		Low profile 14" discharge spout	$320.00	n/a

DRIVE OPTIONS		Description	List Prices	Setup
504415		Electric drive up to 40'	$4,650.00	n/a
504417		Electric drive 40' - 90'	$4,910.00	n/a
504418		Electric drive 90' and up	$5,180.00	n/a
650509467		In-Line Reversible Drive for 24" OBL Includes end roller. Discharge not included	$7,700.00	n/a
650505069		Electric drive with gearbox 90' and up	$2,200.00	n/a

Electric motors on page 18

OPTIONS		Description	List Prices	Setup
504413		OBL-24 Meridian bin transition	$250.00	n/a
503333		Discharge stand	$270.00	n/a

~ 24" Wide Belt
~ 4,500 Bushel per hour at 400 FPM
~ Open bed with rollers mild steel
~ Stainless Steel available

CONVEY-ALL®
COUNT ON IT.

RECOMMENDED HP RATING FOR UNDERBIN CONVEYORS

US REGION

Effective November 1, 2025

MOTOR	Length	Description	List Prices	Setup
1910000016	Up to 40'	5 HP Single Phase Motor	$1,280.00	n/a
1910000017	Up to 40'	5 HP 3 Phase Motor (230/460 volt)	$790.00	n/a
1910000020	Up to 40'	5 HP 3 Phase Motor (575 volt)	$790.00	n/a
1910000023	40 - 65 Feet	7.5 HP 1PH Motor	$1,780.00	n/a
1910000051	40 - 65 Feet	7.5 HP 3PH Motor 230/460 volt	$1,030.00	n/a
1910000027	40 - 65 Feet	7.5 HP 3PH Motor 575 volt	$1,030.00	n/a
1910000030	65 - 90 Feet	10 HP 1 Phase Motor 1800 RPM	$2,100.00	n/a
1910000029	65 - 90 Feet	10 HP 3PH Motor 230/460 volt	$1,180.00	n/a
1910000033	65 - 90 Feet	10 HP 3PH Motor 575 volt	$1,180.00	n/a
1910000034	90 - 130 Feet	15 HP 3 Phase Motor 1800 RPM (230/460 volt)	$1,650.00	n/a
1910000036	90 - 130 Feet	15 HP 3 Phase Motor 1800 RPM (575 volt)	$1,650.00	n/a
1910000043	130 + Feet	20 HP, 3 Phase Motor 1800 RPM (230/460 Volt),	$2,010.00	n/a
1910000042	130 + Feet	20 HP, 3 Phase Motor 1800 RPM (575 Volt), 70' -	$2,010.00	n/a